Microwave Filter Company

RF & Microwave

Filters & Components

Catalog

Standard and Custom designs available to meet your specifications

"Committed to excellence since 1968"

Military & Commercial Applications

Made in the USA

6743 KINNE STREET
E. SYRACUSE, NY 13057
800-448-1666 • 315-438-4700
E-Mail: mfcsales@microwavefilter.com
Web: www.microwavefilter.com

Microwave Filter Company

Table of Contents

		Page
Ordering & Warranty Information		2
About the Company		3
Capabilities & Certifications		8
Filter Specification Guide		9
Discrete Element Filters		**14**
Description	Frequency	Page
Lowpass Filters, Miniature	0.2 MHz – 1000 MHz	15
Lowpass Filters, Micro-Miniature	500 MHz – 6000 MHz	18
Highpass Filters, Miniature	0.2 MHz – 1000 MHz	21
Highpass Filters, Micro-Miniature	500 MHz – 6000 MHz	24
Bandpass Filters, Miniature	0.5 MHz – 250 MHz	27
Bandpass Filters, Micro-Miniature	100 MHz – 6 GHz	30
Band Reject Filters, Miniature	10 MHz – 100 MHz	33
Surface Mount	10 MHz – 6 GHz	35
Cavity Filters		**36**
Description	Frequency	Page
Iris Coupled Bandpass Filters	300 MHz – 26.5 GHz	37
Combline Bandpass Filters	300 MHz – 26.5 GHz	40
Interdigital Bandpass Filters	300 MHz – 26.5 GHz	43
Waveguide Products		**46**
Description		Page
Iris Coupled Bandpass Filters (Narrow Bandwidth)		47
Post-Iris Coupled Bandpass Filters (Medium Bandwidth)		48
Septum Coupled Bandpass Filters (Wide Bandwidth)		49
Waveguide-to-Coax Adaptors		50
Waveguide Assemblies		51
Wireless and Miscellaneous Products		**52**
Description		Page
Combiners		53
Duplexers		54
Bandpass Filters		55
Notch Filters		56
Tubular Lowpass Filters		57
Hi-Q Cavity Bandpass and Notch Filters		58
Helical Resonators/Stripline Microstrip/Dielectric Resonator Filters		60

Ordering and Warranty Information

Orders may be placed through our local sales Representative or directly with the factory. Final determination of price, delivery, terms and acceptance of orders may be made only by the staff at Microwave Filter Company, Inc. in East Syracuse, New York.

Ordering Address:

Microwave Filter Company, Inc.
6743 Kinne Street
East Syracuse, New York USA 13057
Ordering: 888-206-6610
Main Telephone: 315-438-4700 or 800-448-1666
Fax: 315-463-1467

E-mail: mfcsales@microwavefilter.com
Web site: www.microwavefilter.com
Cage code: 27834

Quotations and Prices:

Prices are F.O.B. shipping point and will be invoiced at current prices in effect on date of purchase. Quotations are for immediate acceptance only. Prices are subject to change without notice. All clerical errors made by Microwave Filter Company, Inc. are subject to correction at its sole discretion.

Payment/Credit Terms:

Terms are Net 30 days to customers who have an established open account. If an open account has not been established, we will ship C.O.D. for certified check. We will also accept Visa, American Express and MasterCard.

Shipping/Freight Claims:

Shipments are made F.O.B. shipping point. All charges related to the shipment are the responsibility of the customer. If the customer does not specify method of shipment, the Company reserves the right to select the carrier of choice. The shipment must be inspected upon receipt. If damaged, it is the responsibility of the customer to file a claim with the carrier.

Sales Tax:

When applicable, sales tax will appear as a separate line item on Microwave Filter Company, Inc. invoices unless a copy of your sales tax exemption certificate has been previously submitted.

Warranty:

Products returned to Microwave Filter Company, Inc. within one year of the date of purchase for original defects will be replaced or repaired free of charge or refunded, at our option, if we confirm the defects. Otherwise, we will notify you of the repair charges before we do any work. This is the full extend of our warranty. Microwave Filter Company, Inc. does not accept responsibility for consequential or collateral damages.

Microwave Filter Company

About Microwave Filter Company,

Microwave Filter Company, Inc. (MFC) has been a leader in the design, development and manufacture of high quality filter products since 1967. MFC offers products covering the frequency range from 5 Hz to 50 GHz for customers around the world. Designs include waveguide, stripline/microstrip, lumped element and cavity/ coaxial topologies. Filter types and accessories include bandpass, bandstop, combiners, couplers, diplexers, highpass, lowpass and adaptors.

All MFC filters are produced within our facility by a staff that is "Committed to Excellence". In fact, MFC has received awards for its outstanding performance in providing excellent customer service, quality product and fast turn-around for large OEM programs.

The products described in this catalog are just a sampling of the designs that have been developed for our customers over the years. Since there are thousands of designs in our archives, it would be impossible to present them all in this format. We invite you to call on our experienced applications' engineers to design the filter to meet your specifications.

Facilities

The company occupies a modern 40,000 square foot facility located in the heart of Central New York (East Syracuse). The facility is equipped with an impressive complement of analytical and design software, test instrumentation, prototype and manufacturing equipment to create passive filters, components and sub systems in the frequency range from 5 Hz to 50 GHz. This manufacturing facility includes a state-of-the-art CAD-CAM system, a test department with automated network analyzers to 50 GHz, a high capacity conveyorized soldering oven, fully compliant finishing operation and a TQM/ ISO9000 based quality assurance program to insure the intrinsic quality of the products produced.

6743 KINNE STREET
E. SYRACUSE, NY 13057
800-448-1666 • 315-438-4700
E-Mail: mfcsales@microwavefilter.com
Web: www.microwavefilter.com

Manufacturing

A network based CAD-CAM system allows the transfer of data and programs to the CNC turning and milling centers for fabrication of machined parts. Prototype PC boards are similarly produced by computer controlled PC board mills. A Grieve high capacity conveyorized soldering oven is used for production of large quantity assemblies while smaller production quantities are assembled at hand soldering or brazing stations.

At MFC we strive for continuous improvement through the application of "lean manufacturing principles". In addition, MFC utilizes cellular manufacturing with visual management controls and ISO 9000-based quality systems from engineering design to manufacturing to ensure the intrinsic quality of the products produced and rapid response to customers' needs.

Mazak CNC Milling Center

Workcell for implementation of Lean Manufacturing

Mazak CNC Lathe for Production Prototyping

A production associate assembles a 2 GHz filter for a leading test equipment manufacturer.

Finite element analysis software allows the modeling of complex waveguide structures.

Testing Lab

Engineering/Test

Efficient simulation, design and analysis software enhanced by proprietary MFC developed software, allow rapid and accurate filter development at reasonable cost. Automated network analyzers provide rigorous product testing and performance data storage on a serial number basis.

High power amplifier for power testing

6743 KINNE STREET
E. SYRACUSE, NY 13057
800-448-1666 • 315-438-4700
E-Mail: mfcsales@microwavefilter.com
Web: www.microwavefilter.com

Measurement readings at the environmental chamber.

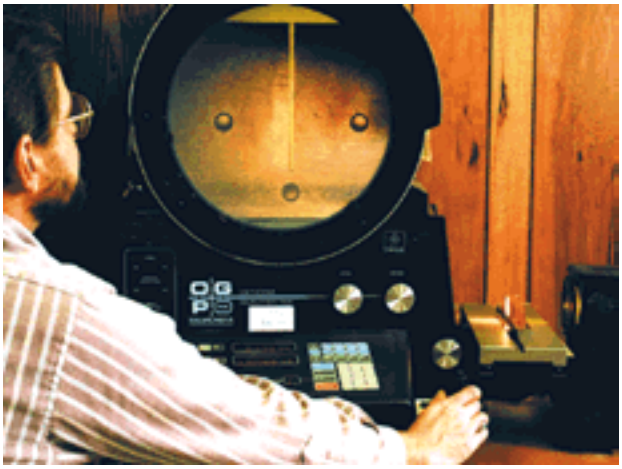

Mechanical specifications are closely inspected with an optical comparator.

Other Testing Facilities

Other in-house testing facilities include three environmental chambers capable of testing products for temperatures of -70 to 200 degrees Celsius and humidity up to 100 percent. Several high power amplifiers are available for power tests up to 2500 watts at 220 MHz and 100 watts at 1,000 MHz. An automated in-house anechoic chamber provides antenna pattern measurement capability in the 2 to 8 GHz frequency range. Facilities are also available for salt spray, sand and dust, shock and vibration, RFI leakage and altitude testing.

C-Band Earth Station for filter testing

Quality

ISO-9001 contract and design review procedures coupled with a QA department that is compliant with MIL-I-45208 inspection systems and MIL-STD-45622 calibration system standards assures process and product integrity. A certified staff soldering instructor regularly trains associates to MIL-STD-2000A (now superceded by J-STD-001). There is 100 percent in-process inspection conducted for electrical and physical tolerances, workmanship and specification compliance.

Quality Service Awards

The Microwave Filter Product Line

Microwave Filter Company designs and manufactures a complete line of high quality filters for a wide variety of applications for customers around the world. Markets and customers served include communications, broadcast and CATV, military/ aerospace, university and government research labs, as well as C-band and Ku-band satellite systems. From ultra miniature LC filters or small Ka-band waveguide filters to large UHF diplexers, MFC can provide cost effective designs in a variety of configurations.

Partial List of MFC Customers

- Agilent Technologies
- Alvarion
- Andrew Corporation
- BAE Systems
- Boeing
- General Dynamics
- Harris Corporation
- Hewlett Packard
- ITT Aerospace
- Lockheed Martin
- Microwave Data Systems
- Motorola
- Northrop Grumman
- Raytheon Systems Company
- Rockwell Collins, Inc.
- U. S. Government

6743 KINNE STREET
E. SYRACUSE, NY 13057
800-448-1666 • 315-438-4700
E-Mail: mfcsales@microwavefilter.com
Web: www.microwavefilter.com

Microwave Filter Company

Capabilities & Certifications

QUALITY

- In process inspection for electrical performance, physical tolerances, workmanship and specification compliance
- ISO9001:2000 for contract and design review procedures
- MIL-STD certifications and compliance using in-house (or MIL certified outsource) capability

Standard	Topic	Conditions
MIL-I-45208	Inspection systems	--
MIL-STD-45622	Calibration system standards	--
MIL-STD-2000A (now superceded by J-STD-001)	Soldering	--
MIL-STD-202F	Environmental	
(and MIL-STD 810)	Operating Temperature Storage Temperature	-55° to +85°C -55° to +125°C
(and MIL-STD 810)	Thermal Shock	Method 107
(and MIL-STD 810)	Altitude	Method 105C
(and MIL-STD 810)	Mechanical Shock	Method 213B
	Connector Strength	Method 211A
(and MIL-STD 810)	Random Vibrations	Method 214
	High Frequency Vibrations	Method 204D
(and MIL-STD-810)	Salt Spray and Fog	Method 101D
	Solvent Resistance	Method 215J
	Solder Heat	Method 210D
	Solderability	Method 208H
	Leak	Method 112E
	Humidity	Method 106F

- In house equipment includes:
  Temperature - Several microprocessor controlled environmental chambers.
  Vibration - Shake tables with accelerometers calibrated for G-forces; adjustable for any plane
  Altitude – Vacuum vessel/pump with nanometer calibrated in inches Hg for barometric pressure; equated to altitude in thousands of feet.
  Power – Up to 2500 watts

In general the parameters describing the transition from "stopband to passband" (and "passband to stopband") of a filter are most significant to the filter and system designer. Thus, it is necessary to define the terminology used to specify filter performance, particularly in the transition area.

TERMINOLOGY:

Attenuation:
Loss of signal strength by transmission through a filter. Refers specifically to signal power amplitude loss. Measured in decibels (dB).

Bandwidth:
The width of the passband of a bandpass filter. Expressed as the frequency difference between lower and upper relative 3 dB attenuation points.

Bandwidth Ratio (Shape Factor):
For bandpass filters the bandwidth ratio or shape factor is the ratio of the attenuation bandwidth to the 3 dB passband bandwidth for a given stopband attenuation. Similarly the shape factor for a band reject filter is the 3 dB bandwidth divided by the attenuation bandwidth. In a like manner the shape factor for a low pass filter is the ratio of the attenuation frequency to the 3 dB cut off frequency while it is the reciprocal ratio for the high pass configuration.

Bessel Function:
A mathematical transfer function used to optimally yield constant time delay in a filter without consideration of amplitude response for a given number of sections, N. This function is similar to a Gaussian function.

Center Frequency (F_c):
The center frequency is defined as the arithmetic or geometric mean between the upper and lower 3 dB frequencies. F_c may not necessarily be the peak transmission point of the band pass filter.

$$\text{Arithmetic mean} = F_c = \frac{F_{-3dB}(\text{high}) + F_{3dB}(\text{low})}{2}$$

$$\text{Geometric mean} = F_c = \sqrt{F_{-3\,dB}\,(\text{high}) \times F_{-3\,dB}\,(\text{low})}$$

Chebychev Function:
A mathematical transfer function that produces a curve with predetermined ripples (usually specified in dB) in the passband and yields the sharpest possible monotonic attenuation slope beyond the cutoff for a given number of filter sections, N. This produces a "squarer" amplitude response than a Butterworth transfer function but with less desirable phase and time delay characteristics. There is a family of Chebyshev transfer functions (0.1 dB ripple, 0.5 dB ripple, etc).

Cut-off Frequency (Fco):
The upper passband edge in lowpass filters or the lower passband edge in highpass filters closest to the stop band. MFC normally uses the point at which the VSWR equals or exceeds 1.5/1.

Decibel (dB):
A unit used to express the power ratio between two signals, P1 and P2 existing at two ports. By definition:

$$dB = 10\ LOG_{10}\ \frac{P1}{P2}$$

It can be used to express voltage and current ratios when the voltage or current is measured at ports having identical impedance.

Dissipation Loss:
Dissipation loss is caused by the I^2R loss in the conductors and components of a device. In general, this loss is inversely proportional to the Q of the component(s)and the structure.

Elliptic Function:
A mathematical transfer function used to yield the sharpest possible amplitude response for a given number of circuit elements. The elliptic transfer function has a Chebyshev response in both the passband and the stopband but a poorer phase response and transient response than any of the other classical transfer functions. Also known as a Cauer transfer function.

Group Delay:
Group Delay is the time delay within the passband of a filter and is the derivative of the phase response with respect to frequency, in radians. Typically the group delay deviation is specified as a peak to peak maximum allowable in the passband. It is of interest since it can limit the minimum symbol width of a digital signal for a given BER (Bit Error Rate). Figure 6 indicates a typical family of curves for group delay as a function of N (number of filter sections) normalized to the 3 dB bandwidth.

Insertion Loss:
The insertion loss of a filter is the additional loss between the source and the load caused by the insertion of the filter compared to its absence. Insertion loss is equal to the sum of the dissipation loss and the reflection (return) loss.

Linear Phase Filter:
Since phase is the time integral of frequency, a filter with a linear phase as a function of passband frequency will exhibit a constant time delay in its passband (see Group Delay).

Passband Ripple:
In a band pass filter this refers to the wave-like variation in attenuation in the passband of the filter due to load mismatch (VSWR). Classic transfer functions such as Butterworth (Max Flat), Gaussian and Bessel have no ripple while Chebychev and Elliptic transfer functions are characterized by equal ripple in the passband.

Phase Shift:
The changing of the phase of a signal as it passes through a filters. A delay in time of the signal is referred to as phase lag. In normal networks, phase lag increases with frequency, producing a positive envelope delay.

Q or Quality Factor:
A figure of merit of a capacitor or inductor. The ratio of its reactance (imaginary impedance) to its equivalent series resistance (real impedance). In bandpass filters, "loaded Q" is a term used to define the ratio of the center frequency, Fc to the 3 dB bandwidth. It's reciprocal (in percent) is the percent bandwidth of the filter.

$$\text{LOADED Q} = \frac{\text{Center Frequency (Fc)}}{\text{3 dB Bandwidth}}$$

Relative Attenuation:
Attenuation measured with the point of minimum attenuation in the filter as the zero dB reference point. See Figure 1.

Return Loss (VSWR):
VSWR is the maximum to minimum value of the standing wave ratio in a circuit due to the mismatch of the source and load. Ideally, conjugate match will produce VSWR of 1. Return loss is related to VSWR as follows

$$RL = 20 \text{ Log } \frac{(VSWR + 1)}{(VSWR - 1)}$$

Thus, a 14 dB return loss corresponds to a VSWR of about 1.5:1.

FIGURE 1

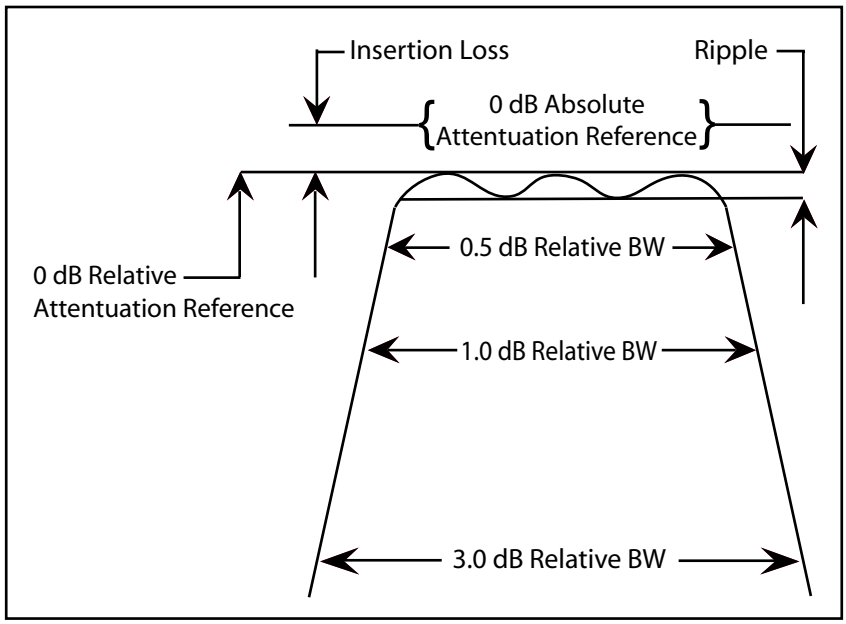

BANDPASS FILTER CURVES

The following curves provide approximate relationships between center frequency insertion loss and 3 dB bandwidth and number of section as independent variables.

While these well-known approximation curves apply to all standard bandpass filters, it is advisable that specific requirements be discussed with an MFC applications engineer.

FIGURE 2
0.5 dB Relative Bandwidth

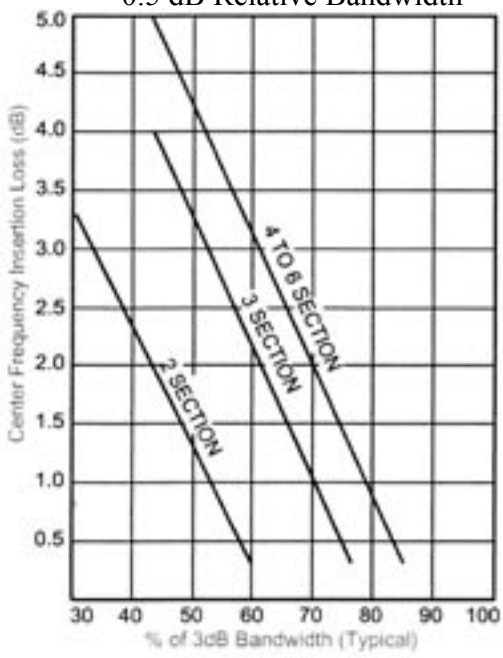

FIGURE 3
1.0 dB Relative Bandwidth

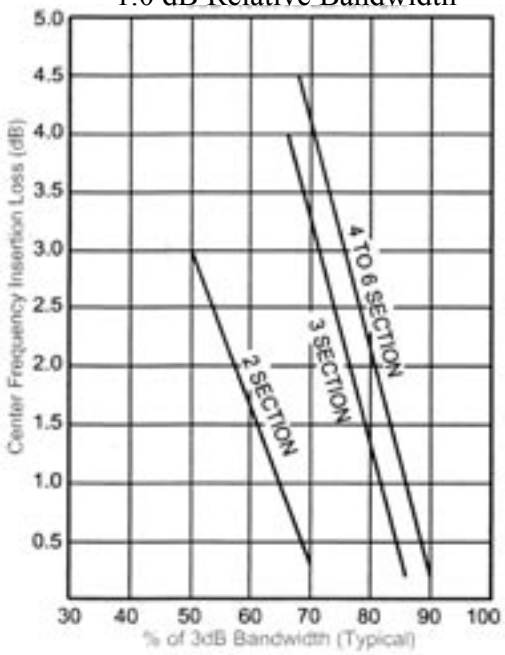

FIGURE 4
5˚ dB Relative Bandwidth

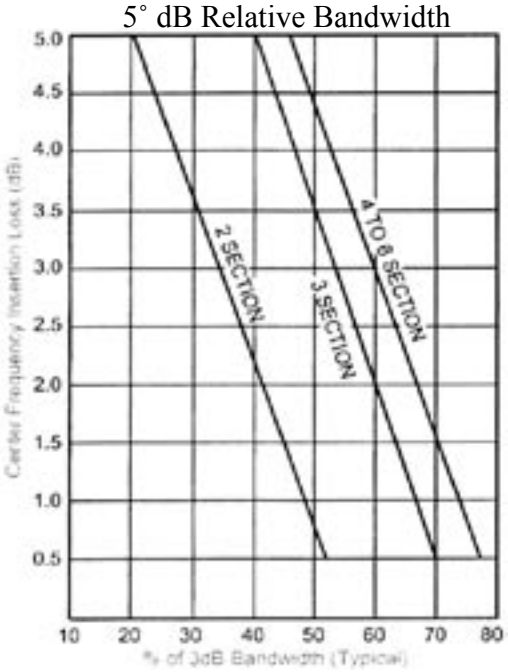

FIGURE 5
1.5/1 VSWR Bandwidth

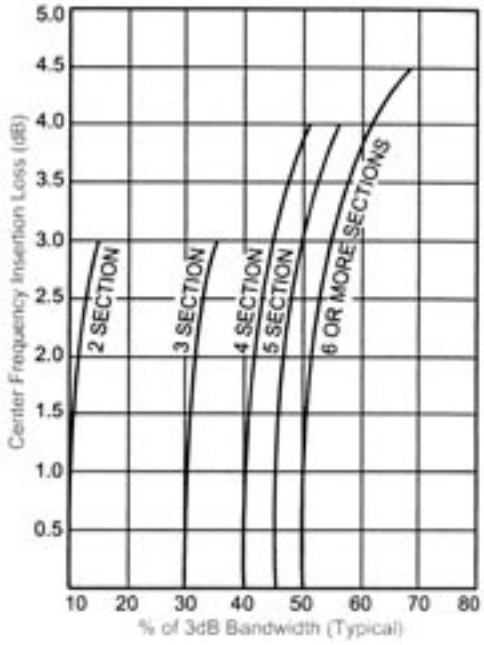

FIGURE 6

Group Delay

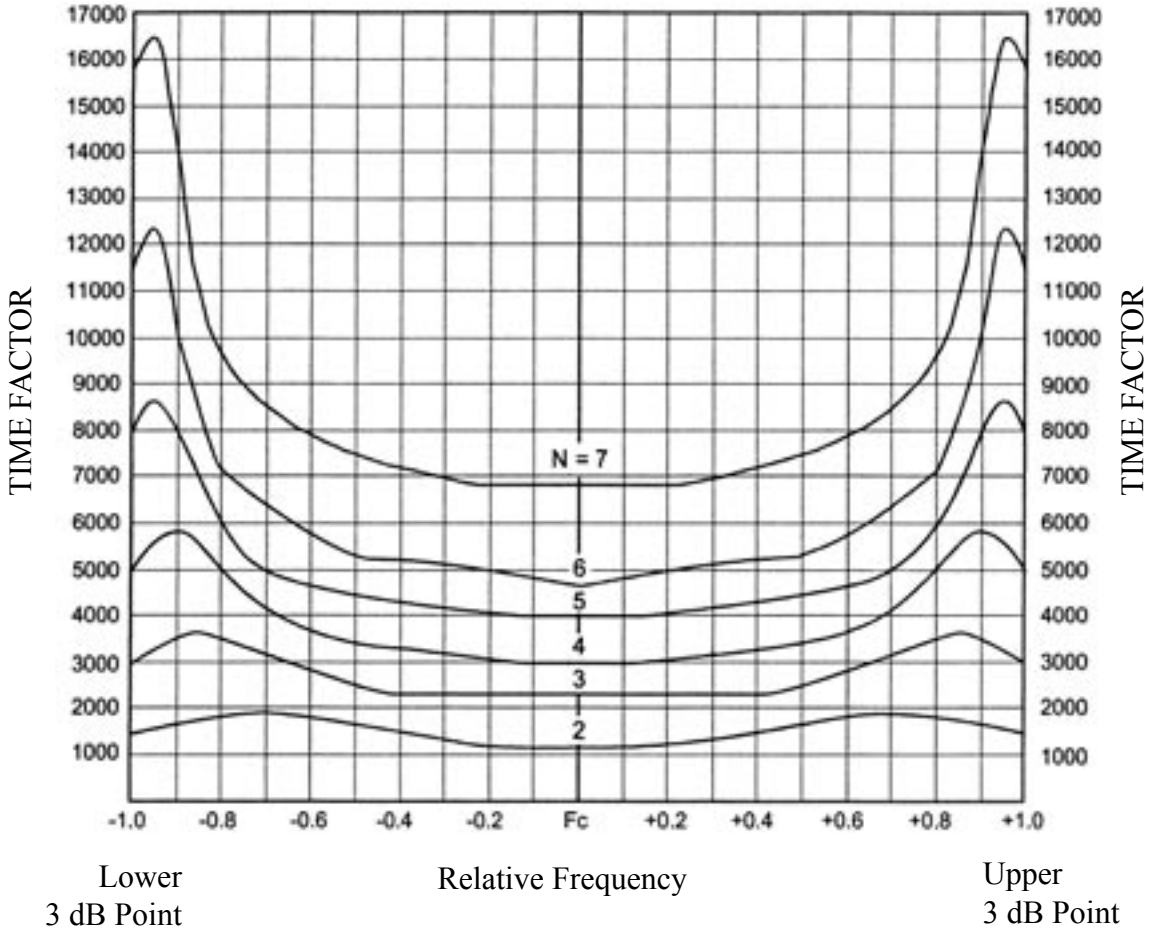

The approximate group (time) delay of an MFC Chebyshev bandpass filter can be calculated using the following equation:

$$\frac{TF}{BW_{-3\ dB} \times \pi} = \text{Nanoseconds}$$

Where $BW_{-3\ dB}$ is the filter relative bandwidth in MHz and TF is the time factor taken from the graph.

Example

A 5 section filter, with 3 dB bandwidth equal to 400 MHz would have a group delay at Fc of approximately:

$$\frac{4000}{400 \times 3.14} = \frac{10}{3.14} = 3.18 \text{ Nanoseconds}$$

The group delay at Fc plus or minus 140 MHz is:

$$\frac{5000}{400 \times 3.14} = \frac{5000}{1256} = 3.98 \text{ Nanoseconds}$$

Microwave Filter Company

DISCRETE ELEMENT
FILTERS

A variety of filter requirements can be satisfied by using a Microwave Filter Company discrete element (LC) filter. These versatile units cover the broad frequency range of 200 KHz to 6 GHz, and are available in a variety of packages. All standard bandpass LC filters utilize a low ripple Chebyshev design which offers the best compromise of low loss, low VSWR, and high selectivity. Each filter situation is unique, and the data provided on the following pages offers only a small sample of our capabilities. Should a different design become necessary to meet your requirements, MFC can provide units with Bessel, Butterworth, Elliptic, Gaussian, or Linear Phase responses.

Miniature and Micro-miniature LC Filters:
Miniature and Micro-miniature filters are perfect for applications where size is at a premium. The lowpass and highpass versions cover the frequency range from 0.2 MHz to 6 GHz, while the bandpass filters will cover from 0.5 MHz to 6 GHz. These units are usually designed to a 0.1 dB Chebyshev response using 3 to 9 sections, although other responses and number of sections are available to meet specific requirements. A variety of connector options are also available including surface mount. These units provide similar performance to the larger LC filters with the same frequency, bandwidth, and attenuation requirements.

Design Curves

The normalized bandwidth attenuation curves included here-in are representative only and are not meant to be definitive with regard to the filter parameters. Many other variables allow the designer to tailor the transfer function to meet the custom needs of a requirement.

Microwave Filter Company

ML Series

Discrete Element, Miniature Lowpass Filters

Microwave Filter Company's ML series of Lowpass filters offer superior performance in a small package for a wide range of applications.

Features....

- Available frequency range: 0.2 MHz to 1000 MHz
- Miniature package
- 3-10 section designs are standard
- Call the factory for custom designs

SPECIFICATIONS

Model No.	Frequency (MHz)	VSWR typical	Average Power (Watts)	Impedance (ohms)	No. of Sections
ML10	0.2-10	1.5:1	15	50 *	3-10
ML20	10-200	1.5:1	15	50 *	3-10
ML30	150-1000	1.5:1	10	50 *	3-10

*75 Ω is available

MODEL DESIGNATION

Code	Description
1	Number of Sections
2	Model Number
3	Start of Stopband Frequency (MHz)
4	3dB Cut -off Frequency (MHz)
5	Connector Code (Input/Output)
6	Mechanical Outline (Style)

SAMPLE

8	ML20-	70/	50-	PN/PN-	1
1	2	3	4	5	6

CONNECTOR CODE CHART

Connector Style	Connector Code
"N" Female	NF
"N" Male	NM
BNC Female	BF
BNC Male	BM
TNC Female	TF
TNC Male	TM
SMA Female	SF
SMA Male	SM
PC Pins	PN
Special	XX

*Note: For illustration purposes only. Consult factory for specific information.

6743 KINNE STREET
E. SYRACUSE, NY 13057
800-448-1666 • 315-438-4700
E-Mail: mfcsales@microwavefilter.com
Web: www.microwavefilter.com

Selectivity- The stopband performance of a filter determines the number of sections required. Use the following graph.

The graph provides the lowpass filter stopband attenuation as a function of the number of filter sections and the stopband frequency F_s normalized to the 3dB cutoff frequency $F_{-3\ dB}$

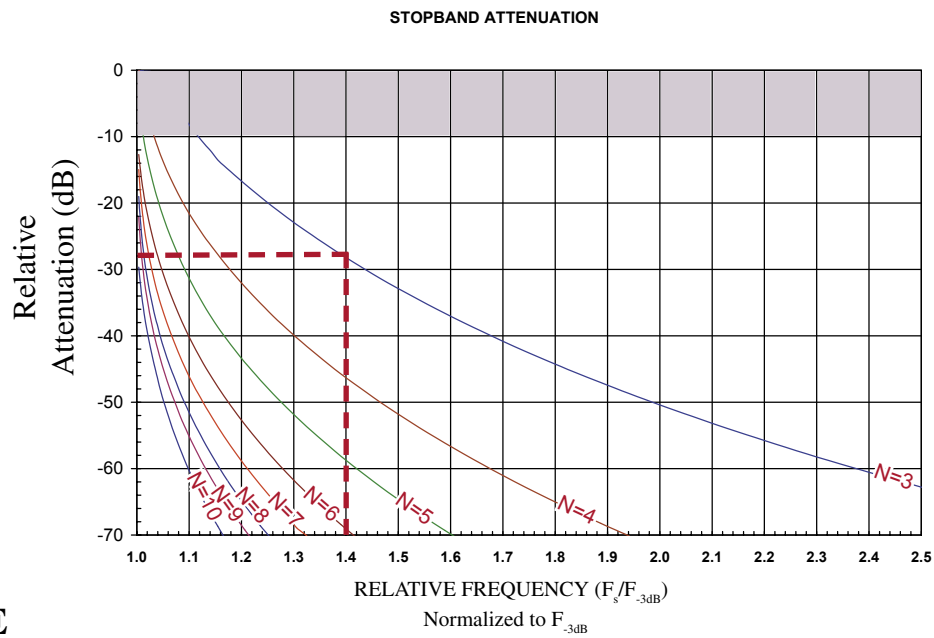

EXAMPLE

Determine the number of sections required to achieve an attenuation of 30 dB at 140 MHz (F_s) with a 3 dB cutoff frequency (F_{-3dB}) of 100 MHz

- 3dB Cutoff Frequency, F_{-3dB} = 100 MHz
- Stopband rejection frequency F_s = 140 MHz
- Attenuation value of stopband= 30dB

<u>Step 1.</u> Normalize stopband frequency (F_s) to the -3 dB cutoff frequency F_{-3dB}

$$\frac{F_s}{F_{-3dB}} = \frac{140MHz}{100MHz} = 1.4$$

<u>Step 2.</u> Determine the minimum number of sections required to provide a stopband attenuation equal to or greater than 30dB.
Note from the intersection of 1.4 on the X- axis and curve N=4 the attenuation (Y-axis) is -46 dB and N=3 is approx -28dB. Therefore the minimum number of sections required is N = 4

*Note: For illustration purposes only. Consult factory for specific information.

Microwave Filter Company

ML Series
Discrete Element, Miniature Lowpass Filters

STYLE 1 CONNECTORS

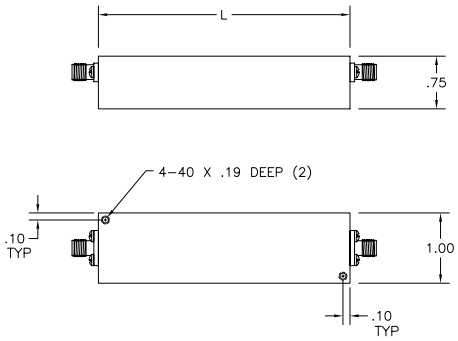

STYLE 1 PINS

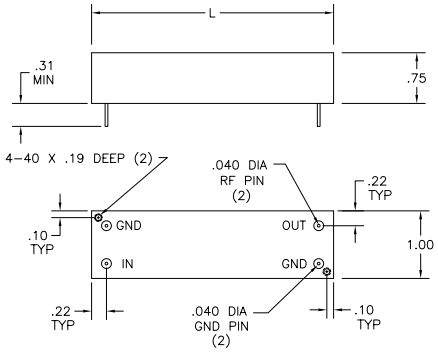

STYLE 2 CONNECTORS

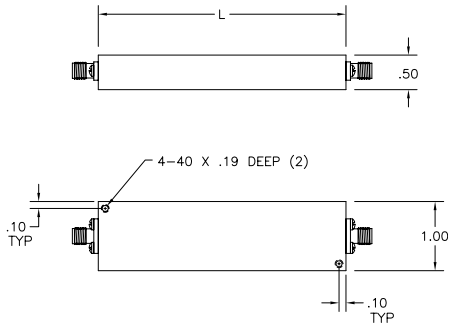

STYLE 2 PINS

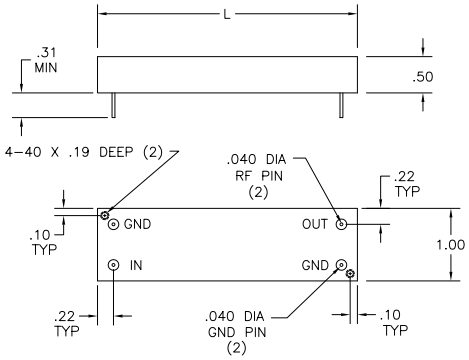

Model	Number of Sections	Style	Width (IN.)	Height (IN.)	Length (IN.)
ML Series	3-6	1	1.00	0.75	2.38
ML Series	7-10	1	1.00	0.75	3.58
ML Series	3-6	2	1.00	0.50	2.38
ML Series	7-10	2	1.00	0.50	3.58

6743 KINNE STREET
E. SYRACUSE, NY 13057
800-448-1666 • 315-438-4700
E-Mail: mfcsales@microwavefilter.com
Web: www.microwavefilter.com

Microwave Filter Company

MT Series
Discrete Element, Micro-Miniature Lowpass Filters

Microwave Filter Company's MT series of Lowpass filters offer superior performance in a small package for a wide range of applications.

Features....

- Available frequency range: 500 MHz to 6000 MHz
- Micro-Miniature package
- 3-10 section designs are standard
- Call the factory for custom designs

SPECIFICATIONS

Model No.	Frequency (MHz)	VSWR typical	Average Power (Watts)	Impedance (ohms)	No. of Sections
MT10	500-6000	1.5:1	1	50	3-10

MODEL DESIGNATION

Code	Description
1	Number of Sections
2	Model Number
3	Start of Stopband Frequency (MHz)
4	3dB Cut -off Frequency (MHz)
5	Connector Code (Input/Output)
6	Mechanical Outline (Style)

CONNECTOR CODE CHART

Connector Style	Connector Code
SMA Female	SF
SMA Male	SM
PC Pins	PN
Special	XX

SAMPLE

8	MT10-	2000/	1600-	PN/PN-	1
1	2	3	4	5	6

Selectivity- The stopband performance of a filter determines the number of sections required. Use the following graph.

The graph provides the lowpass filter stopband attenuation as a function of the number of filter sections and the stopband frequency F_s normalized to the 3dB cutoff frequency $F_{-3\ dB}$

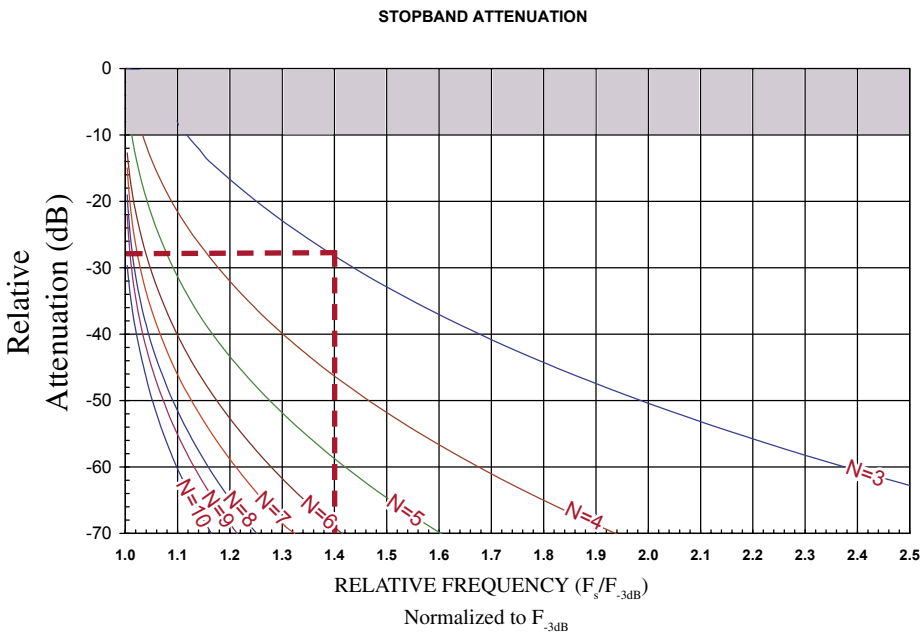

EXAMPLE

Determine the number of sections required to achieve an attenuation of 30 dB at 2800 MHz (F_s) with a 3 dB cutoff frequency (F_{-3dB}) of 2000 MHz

- 3dB Cutoff Frequency, F_{-3dB} = 2000 MHz
- Stopband rejection frequency F_s = 2800 MHz
- Attenuation value of stopband= 30dB

Step 1. Normalize stopband frequency (F_s) to the -3 dB cutoff frequency F_{-3dB}

$$\frac{F_s}{F_{-3dB}} = \frac{2800\text{MHz}}{2000\text{MHz}} = 1.4$$

Step 2. Determine the minimum number of sections required to provide a stopband attenuation equal to or greater than 30dB.
Note from the intersection of 1.4 on the X- axis and curve N=4 the attenuation (Y-axis) is -46 dB and N=3 is approx -28dB. Therefore the minimum number of sections required is N = 4

*Note: For illustration purposes only. Consult factory for specific information.

Microwave Filter Company

MT Series

Discrete Element, Micro-Miniature Lowpass Filters

STYLE 1 CONNECTORS

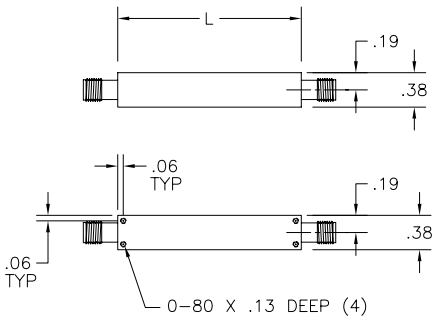

STYLE 1 PINS

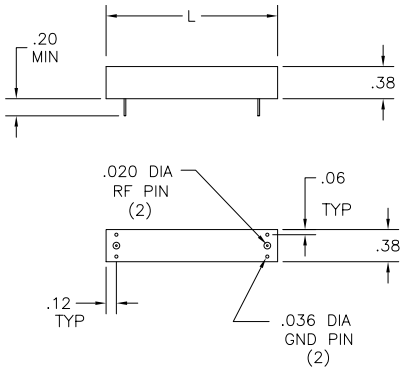

STYLE 2 CONNECTORS

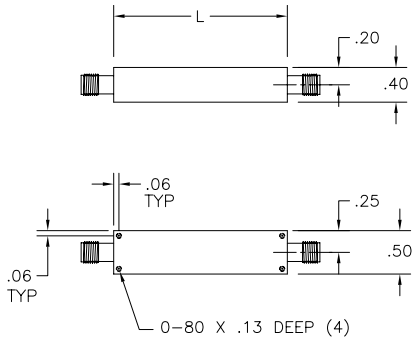

STYLE 2 PINS

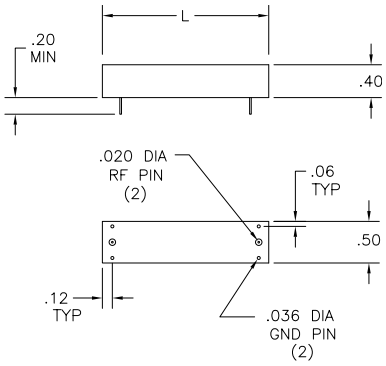

Model	Number of Sections	Style	Width (IN.)	Height (IN.)	Length (IN.)
MT Series	3	1	0.38	0.38	0.75
MT Series	4-5	1	0.38	0.38	1.0
MT Series	6-7	2	0.50	0.40	1.5
MT Series	8-9	2	0.50	0.40	1.75
MT Series	10	2	0.50	0.40	2.0

Microwave Filter Company

MH Series
Discrete Element, Miniature Highpass Filters

Microwave Filter Company's MH series of Highpass filters offer superior performance in a small package for a wide range of applications.

- Features....
  - Available frequency range: 0.2 MHz to 1000 MHz
  - Miniature package
  - 3-10 section designs are standard
  - Call the factory for custom designs

SPECIFICATIONS

Model No.	Frequency (MHz)	VSWR typical	Average Power (Watts)	Impedance (ohms)	No. of Sections
MH10	0.2-10	1.5:1	15	50 *	3-10
MH20	10-200	1.5:1	15	50 *	3-10
MH30	150-1000	1.5:1	10	50 *	3-10

*75 Ω is available

MODEL DESIGNATION

Code	Description
1	Number of Sections
2	Model Number
3	Start of Stopband Frequency (MHz)
4	3dB Cut -off Frequency (MHz)
5	Connector Code (Input/Output)
6	Mechanical Outline (Style)

SAMPLE

8	MH20-	50/	70-	SF/ SF-	1
1	2	3	4	5	6

CONNECTOR CODE CHART

Connector Style	Connector Code
"N" Female	NF
"N" Male	NM
BNC Female	BF
BNC Male	BM
TNC Female	TF
TNC Male	TM
SMA Female	SF
SMA Male	SM
PC Pins	PN
Special	XX

6743 KINNE STREET
E. SYRACUSE, NY 13057
800-448-1666 • 315-438-4700
E-Mail: mfcsales@microwavefilter.com
Web: www.microwavefilter.com

Microwave Filter Company

MH Series
Discrete Element, Miniature Highpass Filters

Selectivity- The stopband performance of a filter determines the number of sections required. Use the following graph.

The graph provides the highpass filter stopband attenuation as a function of the number of filter sections and the 3 dB cutoff frequency $F_{-3\,dB}$ normalized to the stopband frequency, F_s

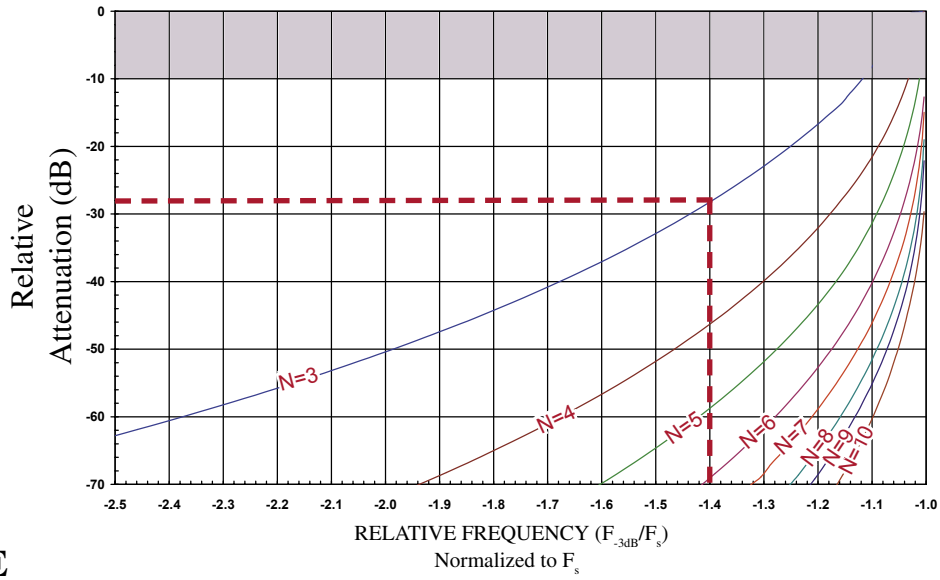

EXAMPLE

Determine the number of sections required to achieve an attenuation of 30 dB at 100 MHz (F_s) with a 3 dB cutoff frequency ($F_{-3\,dB}$) of 140 MHz

- 3 dB Cutoff Frequency, $F_{-3\,dB}$ = 140 MHz
- Stopband rejection frequency F_s = 100 MHz
- Attenuation value of stopband= 30 dB

Step 1. Normalize -3 dB cutoff frequency $F_{-3\,dB}$ to the stopband frequency (F_s)

$$\frac{F_{-3dB}}{F_s} = \frac{140MHz}{100MHz} = 1.4$$

Step 2. Determine the minimum number of sections required to provide a stopband attenuation equal to or greater than 30 dB.
Note from the intersection of 1.4 on the X- axis and curve N=4 the attenuation (Y-axis) is -46 dB and N=3 is approx -28 dB. Therefore the minimum number of sections required is N=4

*Note: For illustration purposes only. Consult factory for specific information.

Microwave Filter Company

MH Series

Discrete Element, Miniature Highpass Filters

STYLE 1 CONNECTORS

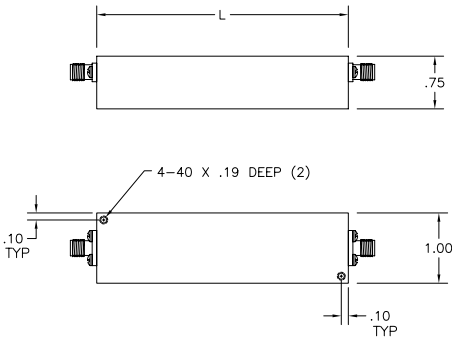

STYLE 1 PINS

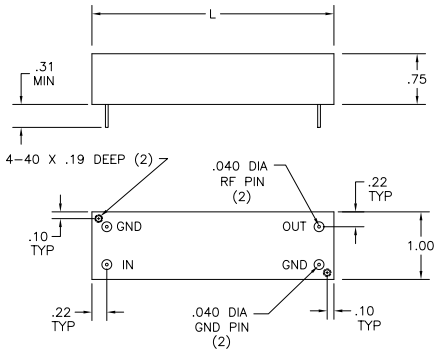

STYLE 2 CONNECTORS

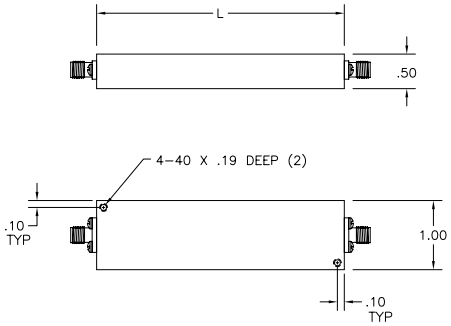

STYLE 2 PINS

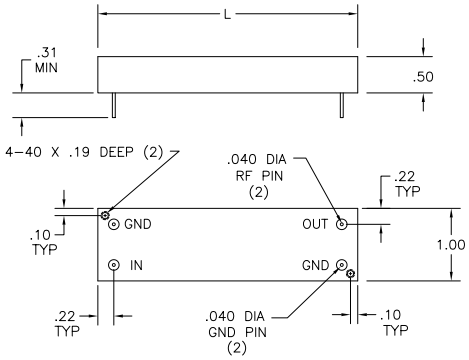

Model	Number of Sections	Style	Width (IN.)	Height (IN.)	Length (IN.)
MH Series	3-6	1	1.00	0.75	2.38
MH Series	7-10	1	1.00	0.75	3.58
MH Series	3-6	2	1.00	0.50	2.38
MH Series	7-10	2	1.00	0.50	3.58

6743 KINNE STREET
E. SYRACUSE, NY 13057
800-448-1666 • 315-438-4700
E-Mail: mfcsales@microwavefilter.com
Web: www.microwavefilter.com

Microwave Filter Company

MD Series

Discrete Element, Micro-Miniature Highpass Filters

Microwave Filter Company's MD series of Highpass filters offer superior performance in a small package for a wide range of applications.

Features....

- Available frequency range: 500 MHz to 6000 MHz
- Micro-Miniature package
- 3-10 section designs are standard
- Call the factory for custom designs

SPECIFICATIONS

Model No.	Frequency (MHz)	VSWR typical	Average Power (Watts)	Impedance (ohms)	No. of Sections
MD10	500-6000	1.5:1	1	50	3-10

MODEL DESIGNATION

Code	Description
1	Number of Sections
2	Model Number
3	Start of Stopband Frequency (MHz)
4	3dB Cut -off Frequency (MHz)
5	Connector Code (Input/Output)
6	Mechanical Outline (Style)

CONNECTOR CODE CHART

Connector Style	Connector Code
SMA Female	SF
SMA Male	SM
PC Pins	PN
Special	XX

SAMPLE

8	MD10-	100/	150-	SF/SF-	1
1	2	3	4	5	6

Selectivity- The stopband performance of a filter determines the number of sections required. Use the following graph.

The graph provides the lowpass filter stopband attenuation as a function of the number of filter sections and the 3dB cutoff frequency $F_{-3\ dB}$ normalized to the stopband frequency, F_s

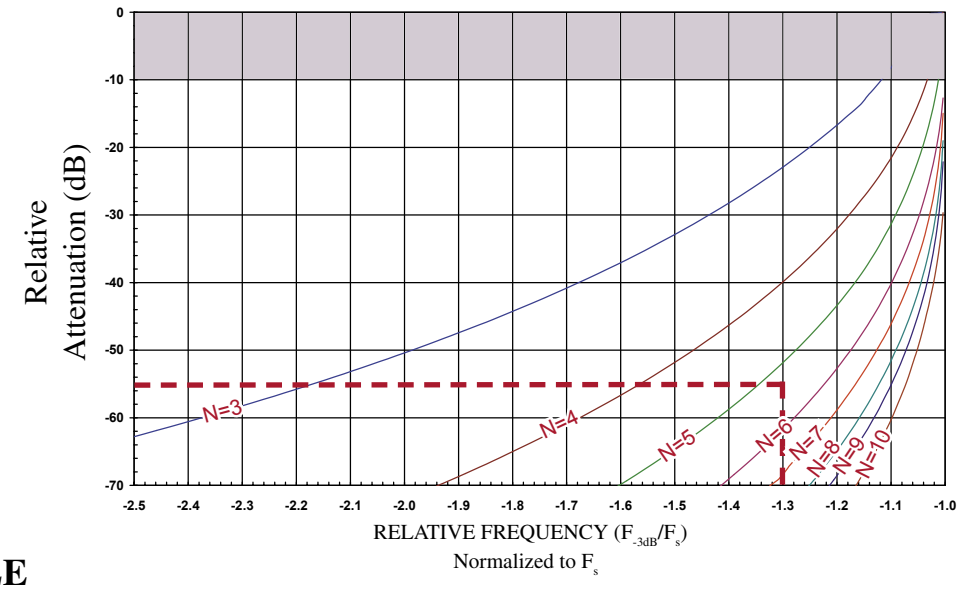

EXAMPLE

Determine the number of sections required to achieve an attenuation of 55 dB at 1000 MHz (F_s) with a 3 dB cutoff frequency ($F_{-3\ dB}$) of 1300 MHz

- 3 dB Cutoff Frequency, $F_{-3\ dB}$ = 1300 MHz
- Stopband rejection frequency F_s = 1000 MHz
- Attenuation value of stopband= 55 dB

Step 1. Normalize -3 dB cutoff frequency $F_{-3\ dB}$ to the stopband frequency (F_s)

$$\frac{F_{-3dB}}{F_s} = \frac{1300MHz}{1000MHz} = 1.3$$

Step 2. Determine the minimum number of sections required to provide a stopband attenuation equal to or greater than 55 dB.

Note from the intersection of 1.3 on the X- axis and curve N=5 the attenuation (Y-axis) is -52 dB and N=6 is approx -62 dB. Therefore the minimum number of sections required is N=6

*Note: For illustration purposes only. Consult factory for specific information.

Microwave Filter Company

MD Series

Discrete Element, Micro-Miniature Highpass Filters

STYLE 1 CONNECTORS

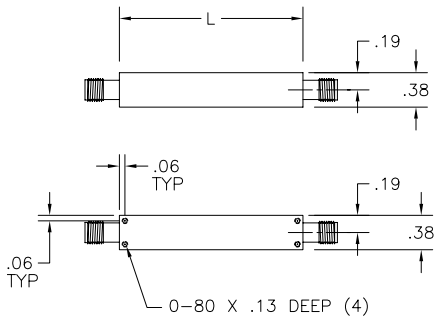

STYLE 1 PINS

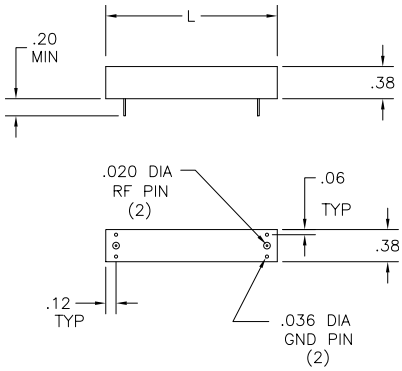

STYLE 2 CONNECTORS

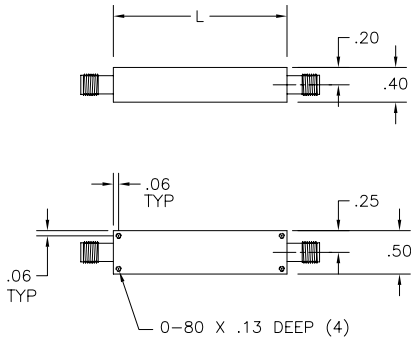

STYLE 2 PINS

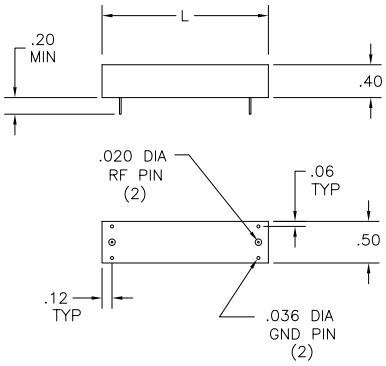

Model	Number of Sections	Style	Width (IN.)	Height (IN.)	Length (IN.)
MD Series	3	1	0.38	0.38	0.75
MD Series	4-5	1	0.38	0.38	1.0
MD Series	6-7	2	0.50	0.40	1.5
MD Series	8-9	2	0.50	0.40	1.75
MD Series	10	2	0.50	0.40	2.0

Microwave Filter Company

MB Series
Discrete Element
Miniature Bandpass Filters

Microwave Filter Company's MB series of miniature bandpass filters utilize high quality components for narrow and wide band filter applications.

Features....

- Available frequency range: 0.5 MHz to 250 MHz
- Miniature package
- 3-9 section designs are standard
- Call the factory for custom designs

SPECIFICATIONS

Model No.	Frequency (MHz)	3 dB BW (percent)	VSWR typical	Average Power (Watts)	Impedance (ohms)	No. of Sections
MB10	0.5-250	3-50	1.5:1	15	50 *	3-9

*75 Ω is available

MODEL DESIGNATION

Code	Description
1	Number of Sections
2	Series
3	Center Frequency (MHz)
4	3 dB Bandwidth (MHz)
5	Connector Code (Input/Output) (see chart)
6	Mechanical Outline (Style)

SAMPLE

8	MB10	100/	10-	PN/PN-	1
1	2	3	4	5	6

CONNECTOR CODE CHART

Connector Style	Connector Code
"N" Female	NF
"N" Male	NM
BNC Female	BF
BNC Male	BM
TNC Female	TF
TNC Male	TM
SMA Female	SF
SMA Male	SM
PC Pins	PN
Special	XX

6743 KINNE STREET
E. SYRACUSE, NY 13057
800-448-1666 • 315-438-4700
E-Mail: mfcsales@microwavefilter.com
Web: www.microwavefilter.com

The curves below show the attenuation as a function of the normalized 3dB bandwidth. The following formula is used to predict the attenuation for a given number of sections:

$$\text{Number of normalized 3 dB bandwidths from center frequency, } BW_N = \frac{\text{Rejection Frequency (MHz)} - \text{Center Frequency (MHz)}}{\text{3 dB Bandwidth (MHz)}}$$

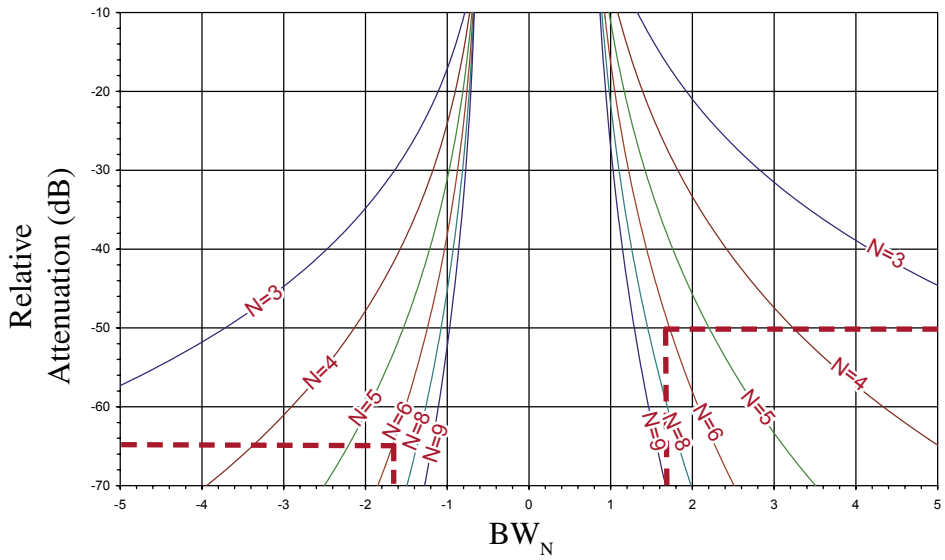

EXAMPLE

Determine minimum attenuation levels at 225 MHz and 275 MHz for the following filter:

Center Frequency = 250 MHz
Minimum 3 dB Bandwidth = 15 MHz
Number of sections = 6

Solution:

3 dB bandwidths from Fc,(BW_N) = (225 – 250)/15 =- 1.67 BW_N
(275 – 250)/15 = +1.67 BW_N

From the curve below: -1.67 BW = 65 dB
+1.67 BW = 50 dB

*Note: For illustration purposes only. Consult factory for specific information.

Microwave Filter Company

MB Series
Discrete Element
Miniature Bandpass Filters

STYLE 1 CONNECTORS

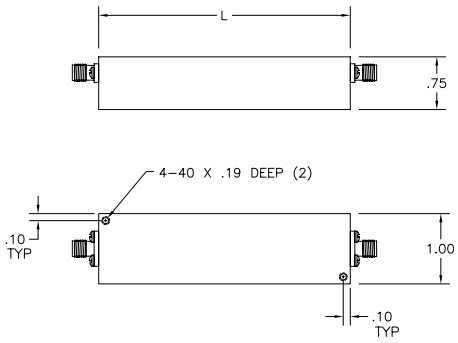

STYLE 1 PINS

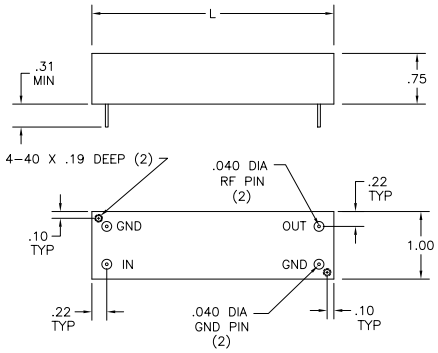

STYLE 2 CONNECTORS

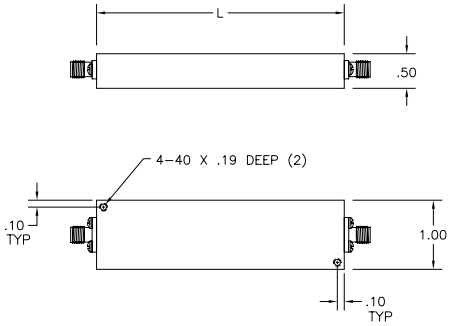

STYLE 2 PINS

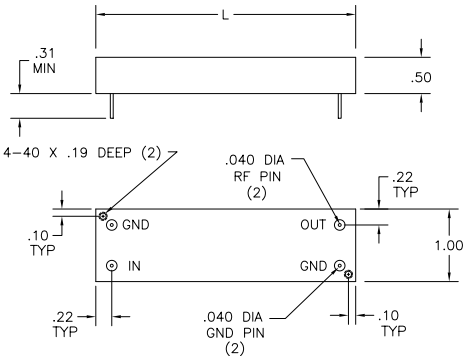

Model	Number of Sections	Style	Width (IN.)	Height (IN.)	Length (IN.)
MB Series	3-5	1	1.00	0.75	2.38
MB Series	6-9	1	1.00	0.75	3.58
MB Series	3-5	2	1.00	0.50	2.38
MB Series	6-9	2	1.00	0.50	3.58

6743 KINNE STREET
E. SYRACUSE, NY 13057
800-448-1666 • 315-438-4700
E-Mail: mfcsales@microwavefilter.com
Web: www.microwavefilter.com

Microwave Filter Company

MP Series
Discrete Element
Micro-Miniature Bandpass Filters

Microwave Filter Company's MP series micro-miniature bandpass filters utilize high quality components for narrow and wide band filter applications.

Features....

- Available frequency range: 100 MHz to 6000 MHz
- Micro-Miniature package
- 3-9 section designs are standard
- Call the factory for custom designs

SPECIFICATIONS

Model No.	Frequency (MHz)	3 dB BW (percent)	VSWR typical	Average Power (Watts)	Impedance (ohms)	No. of Sections
MP10	100-6000	3-50	1.5:1	1	50	3-9

MODEL DESIGNATION

Code	Description
1	Number of Sections
2	Series
3	Center Frequency (MHz)
4	3 dB Bandwidth (MHz)
5	Connector Code (Input/Output) (see chart)
6	Mechanical Outline (Style)

CONNECTOR CODE CHART

Connector Style	Connector Code
SMA Female	SF
SMA Male	SM
PC Pins	PN
Special	XX

SAMPLE

8	MP10-	100/	20-	SF/SF-	1
1	2	3	4	5	6

Microwave Filter Company

MP Series
Discrete Element
Micro-Miniature Bandpass Filters

The curves below show the attenuation as a function of the normalized 3dB bandwidth. The following formula is used to predict the attenuation for a given number of sections:

$$\text{Number of normalized 3 dB bandwidths from center frequency, } BW_N = \frac{\text{Rejection Frequency (MHz)} - \text{Center Frequency (MHz)}}{\text{3 dB Bandwidth (MHz)}}$$

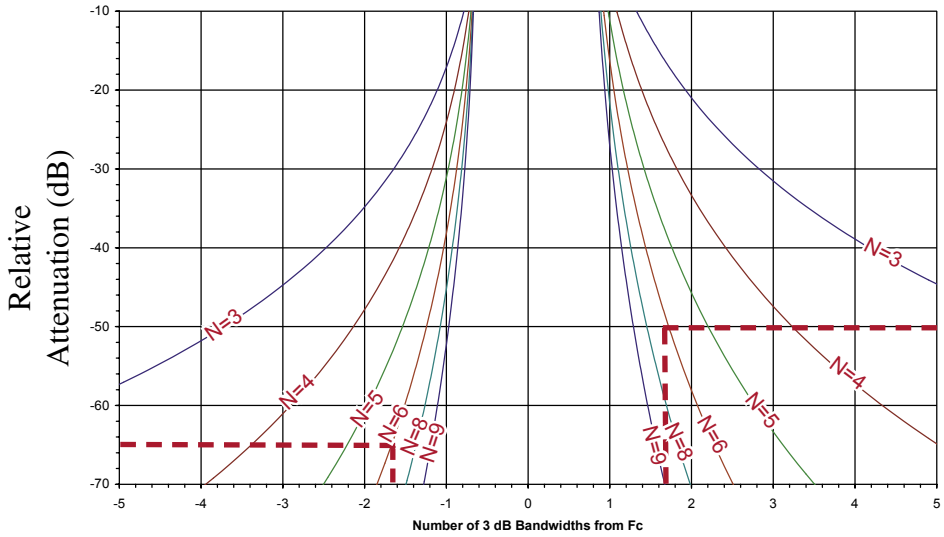

EXAMPLE

Determine minimum attenuation levels at 225 MHz and 275 MHz for the following filter:

Center Frequency = 250 MHz
Minimum 3 dB Bandwidth = 15 MHz
Number of sections = 6

3 dB bandwidths from Fc,(BW_N) = (225 – 250)/15 = - 1.67 BW
(275 – 250)/15 = +1.67 BW

From the curve above: -1.67 BW = 65 dB
+1.67 BW = 50 dB

*Note: For illustration purposes only. Consult factory for specific information.

6743 KINNE STREET
E. SYRACUSE, NY 13057
800-448-1666 • 315-438-4700
E-Mail: mfcsales@microwavefilter.com
Web: www.microwavefilter.com

Microwave Filter Company

MP Series
Discrete Element
Micro-Miniature Bandpass Filters

STYLE 1 CONNECTORS

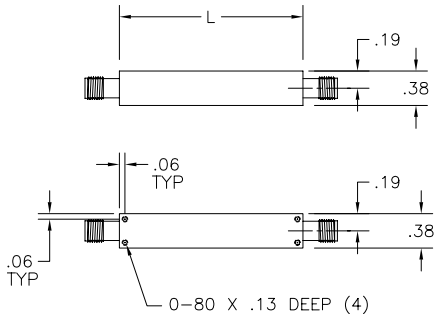

STYLE 1 PINS

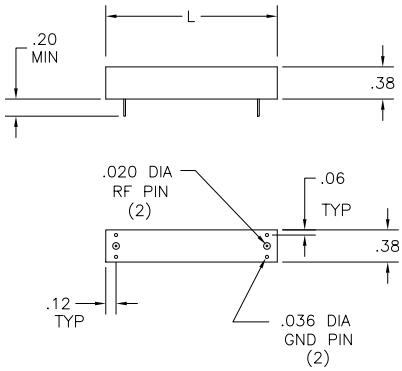

STYLE 2 CONNECTORS

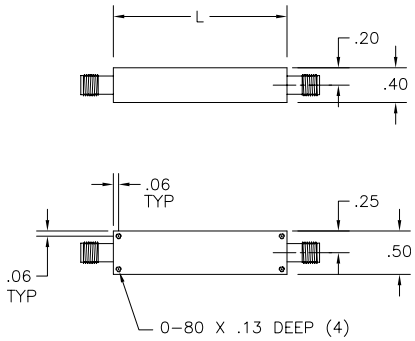

STYLE 2 PINS

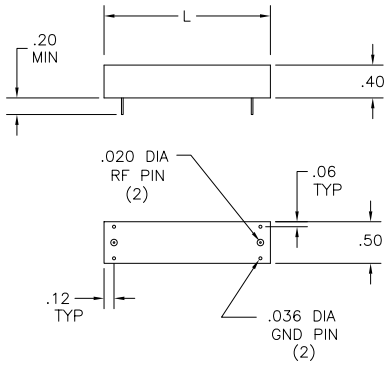

Model	Number of Sections	Style	Width (IN.)	Height (IN.)	Length (IN.)
MP Series	3	1	0.38	0.38	0.75
MP Series	4-5	1	0.38	0.38	1.0
MP Series	6-7	2	0.50	0.40	1.5
MP Series	8-9	2	0.50	0.40	1.75

Microwave Filter Company

MF Series

Discrete Element, Miniature Band Reject Filters

Microwave Filter Company's MF series of Band Reject filters offer superior performance in a small package for a wide range of applications.

Features....

- Available frequency range: 10 MHz to 100 MHz
- Miniature package
- 3-6 section designs are standard
- Call the factory for custom designs

SPECIFICATIONS

Model No.	Center Freq. (MHz)	3 dB BW (percent of Fc)	Typical Notch Attenuation (db)	VSWR typical	Average Power (Watts)	Impedance (ohms)	No. of Sections
MF10	10-100	5-20	50	1.5:1	1	50 *	3-6

*75 Ω is available

MODEL DESIGNATION

Code	Description
1	Number of Sections
2	Model Number
3	Center Frequency of Notch (MHz)
4	3dB Relative Bandwidth (MHz)
5	Connector Code (Input/Output)
6	Mechanical Outline (Style)

CONNECTOR CODE CHART

Connector Style	Connector Code
"N" Female	NF
"N" Male	NM
BNC Female	BF
BNC Male	BM
TNC Female	TF
TNC Male	TM
SMA Female	SF
SMA Male	SM
PC Pins	PN
Special	XX

SAMPLE

4	MF10-	50/	5-	SF/SF-	1
1	2	3	4	5	6

6743 KINNE STREET
E. SYRACUSE, NY 13057
800-448-1666 • 315-438-4700
E-Mail: mfcsales@microwavefilter.com
Web: www.microwavefilter.com

Microwave Filter Company

MF Series
Discrete Element, Miniature Band Reject Filters

STYLE 1 CONNECTORS

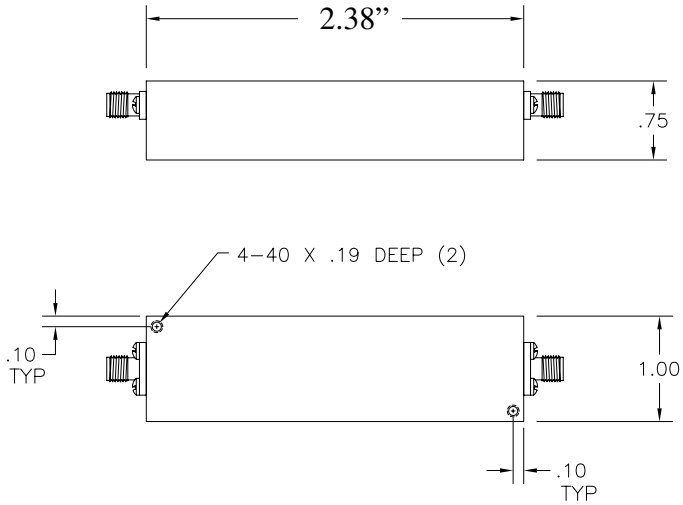

STYLE 1 PINS

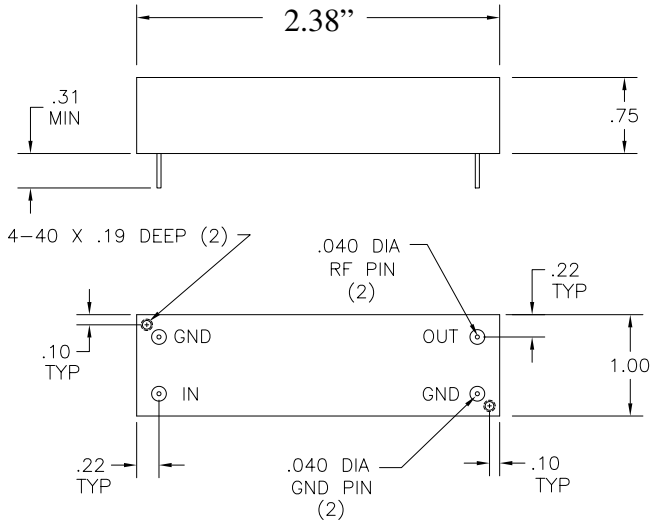

Microwave Filter Company

Surface Mount
Filters

Microwave Filter Company, Inc. offers lumped constant filters for a broad range of selected frequencies, topologies and packages. Use of standard packages has enabled MFC to provide OEM and custom filters while keeping design time to a minimum.

SPECIFICATIONS

Frequency (MHz)	VSWR	Avg Pwr (Watts)	Impedance (Ohms)	No. of Sections	Shock	Vibration	Temperature	Relative Humidity
10-6000	1.5:1	1	50	2-10	20 G's 1/2 Sine 1 Ms	10 G's 10 Hz - 2000 Hz	-55° to +85°C	0-95%

Packages available include Miniature, which covers the 0.5 to 500 MHz frequency range, as well as Micro-miniature, which covers the 50 to 3,000 MHz frequency range. Topologies offered include low pass, high pass, bandpass, band reject and diplexer designs. Also available are custom filter banks which incorporate several topologies in a single package. All packages can be manufactured in various styles such as Surface Mount, Connectorized, PC Mount, Drop-in or any other configuration suitable for the frequency range of the filters.

The standard designs are 0.1 dB Chebyshev response. Other response types such as Butterworth, Elliptic, Bessel as well as special filter shapes are also available. Special design capabilities include, but are not limited to, pseudo-elliptical, amplitude equalization, and group delay equalization requirements. The filters are manufactured with stable high Q components exhibiting low temperature coefficient characteristics.

Each filter can be packaged to withstand severe environmental stresses including temperature, humidity, shock, vibration and acceleration.

Contact Factory for:
-Electrical Performance
-Mechanical configuration

6743 KINNE STREET
E. SYRACUSE, NY 13057
800-448-1666 • 315-438-4700
E-Mail: mfcsales@microwavefilter.com
Web: www.microwavefilter.com

Microwave Filter Company

CAVITY FILTERS

Microwave Filter Company's Iris coupled, Combline and Interdigital bandpass filters are fixed tuned filters that feature sharp stopband rejection and lower losses than comparable discrete element or tubular (transmission line) bandpass filters. Parallel coupled, distributed round rod resonators provide high-Q with small size and excellent bandpass response.

These units are particularly rugged and well suited for military and severe environmental conditions. The type of filter selected is usually determined by the desired 3 dB bandwidth percentage of center frequency.

Design Curves

The normalized bandwidth attenuation curves included here-in are representative only and are not meant to be definitive with regard to the filter parameters. Many other variables allow the designer to tailor the transfer function to meet the custom needs of a requirement

Microwave Filter Company

MN Series
Iris Coupled Bandpass Filters

Microwave Filter Company's MN series of Iris coupled filters offer superior performance in a small package for narrow bandwidth applications.

- Features....
  - Available frequency range: 300 MHz to 26.5 GHz
  - Low-profile package
  - Wide range of 3 dB bandwidths (0.1-3%)
  - 2-18 section designs are standard
  - Call the factory for custom designs

SPECIFICATIONS

Model No.	Frequency (GHz)	3 dB BW (percent)	VSWR typical	No. of Sections
MN10	0.3 to 1.5	0.1-3	1.5:1	2-18
MN20	1.5 to 6	0.1-3	1.5:1	2-18
MN30	4 to 10	0.1-3	1.5:1	2-18
MN40	8 to 18	0.1-3	1.5:1	2-18
MN50	18 to 26.5	0.1-3	1.5:1	2-18

MODEL DESIGNATION

Code	Description
1	Number of Sections
2	Model Number
3	Center Frequency (GHz)
4	3 dB Bandwidth (MHz)
5	Connector Code (Input/Output)

SAMPLE

5	MN30 -	5000/	180-	NF/NF
1	2	3	4	5

CONNECTOR CODE CHART

Connector Style	Connector Code
"N" Female	NF
"N" Male	NM
BNC Female	BF
BNC Male	BM
TNC Female	TF
TNC Male	TM
SMA Female	SF
SMA Male	SM
PC Mounting	PC
Special	XX

6743 KINNE STREET
E. SYRACUSE, NY 13057
800-448-1666 • 315-438-4700
E-Mail: mfcsales@microwavefilter.com
Web: www.microwavefilter.com

The curves below show the attenuation as a function of the normalized 3dB bandwidth. The following formula is used to predict the attenuation for a given number of sections:

$$\text{Number of normalized 3 dB bandwidths from center frequency, } BW_N = \frac{\text{Rejection Frequency (MHz)} - \text{Center Frequency (MHz)}}{\text{3 dB Bandwidth (MHz)}}$$

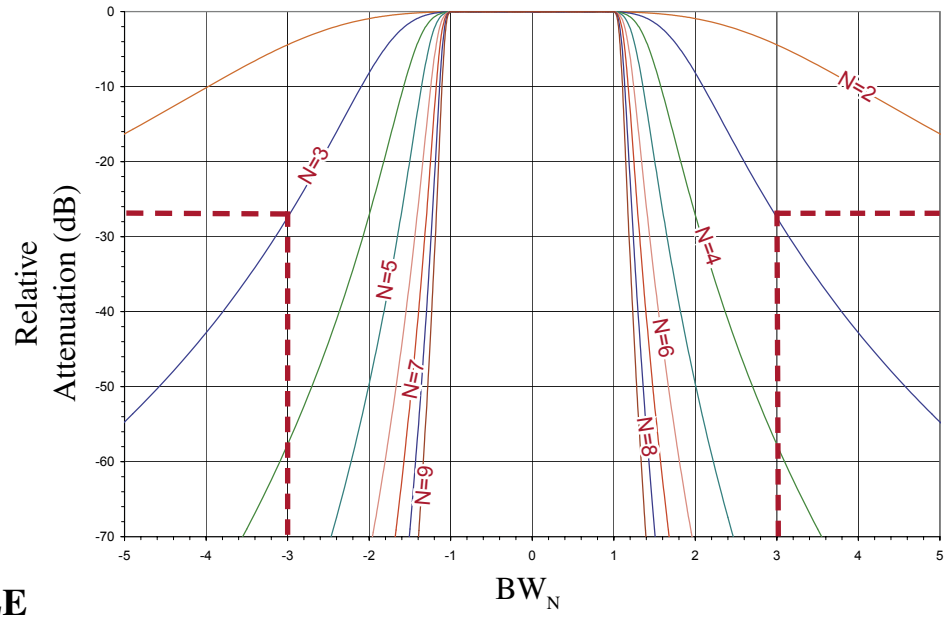

EXAMPLE

Determine minimum attenuation levels at 2482 MHz and 2518 MHz for the following filter:

Center Frequency = 2500 MHz
Minimum 3 dB Bandwidth = 6 MHz
Number of sections = 3

Solution:

3 dB bandwidths from F_c,(BW_N) = $(2482 - 2500)/16 = -3\ BW_N$
$(2518 - 2500)/6 = +3\ BW_N$

From the curve above: $-3\ BW_N = 27$ dB
$+3\ BW_N = 27$ dB

*Note: For illustration purposes only. Consult factory for specific information.

Microwave Filter Company

MN Series

Iris Coupled Bandpass Filters

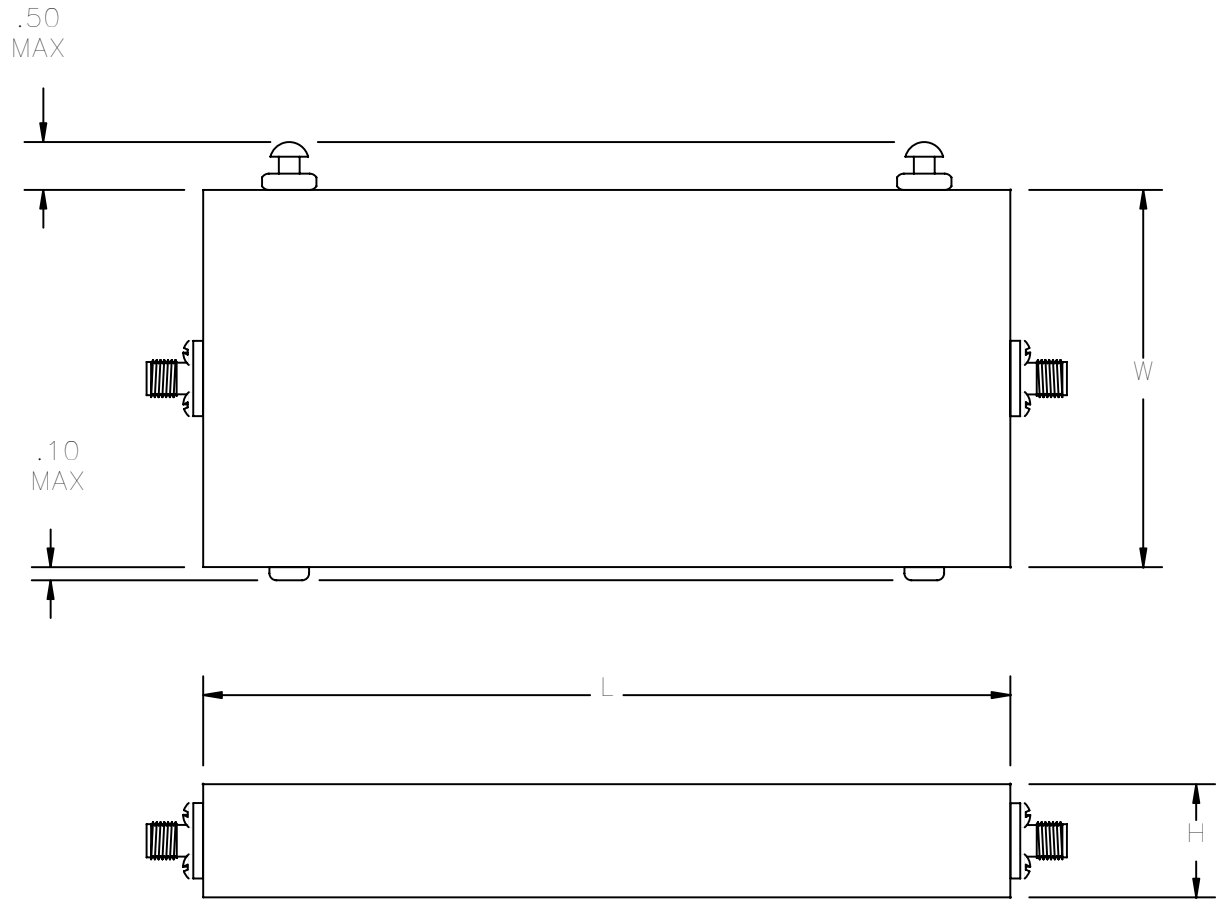

Model	Width* (IN.)	Height (IN.)	Length (IN.)
MN10	2.0 - 5.0	.75	SEE CALCULATIONS
MN20	0.75 - 2.0	.625	SEE CALCULATIONS
MN30	.375 - .75	.437	SEE CALCULATIONS
MN40	.187 - .375	.375	SEE CALCULATIONS
MN50	.125 - .187	.125	SEE CALCULATIONS

ESTIMATED L - [N(PS)] + [N(D)] + H

WHERE:

N = # OF SECTIONS

PS = H(.75)

D = H(.126)

* LOWER FREQUENCY = LARGER W

6743 KINNE STREET
E. SYRACUSE, NY 13057
800-448-1666 • 315-438-4700
E-Mail: mfcsales@microwavefilter.com
Web: www.microwavefilter.com

Microwave Filter Company

MC Series
Combline Bandpass Filters

Microwave Filter Company's MC series of Combline filters offer superior performance in a small package for narrow bandwidth applications.

- Features....
  - Available frequency range: 300 MHz to 26.5 GHz
  - Low-profile package
  - Wide range of 3 dB bandwidths (1-20%)
  - 2-18 section designs are standard
  - Call the factory for custom designs

SPECIFICATIONS

Model No.	Frequency (GHz)	3 dB BW (percent)	VSWR typical	No. of Sections
MC10	0.3 to 1.5	1-20	1.5:1	2-18
MC20	1.5 to 6	1-20	1.5:1	2-18
MC30	4 to 10	1-20	1.5:1	2-18
MC40	8 to 18	1-20	1.5:1	2-18
MC50	18 to 26.5	1-20	1.5:1	2-18

MODEL DESIGNATION

Code	Description
1	Number of Sections
2	Model Number
3	Center Frequency (GHz)
4	3 dB Bandwidth (MHz)
5	Connector Code (Input/Output)

SAMPLE

5	MC30-	5000/	800-	NF/NF
1	2	3	4	5

CONNECTOR CODE CHART

Connector Style	Connector Code
"N" Female	NF
"N" Male	NM
BNC Female	BF
BNC Male	BM
TNC Female	TF
TNC Male	TM
SMA Female	SF
SMA Male	SM
PC Mounting	PC
Special	XX

The curves below show the attenuation as a function of the normalized 3dB bandwidth. The following formula is used to predict the attenuation for a given number of sections:

$$\text{Number of normalized 3 dB bandwidths from center frequency, } BW_N = \frac{\text{Rejection Frequency (MHz)} - \text{Center Frequency (MHz)}}{\text{3 dB Bandwidth (MHz)}}$$

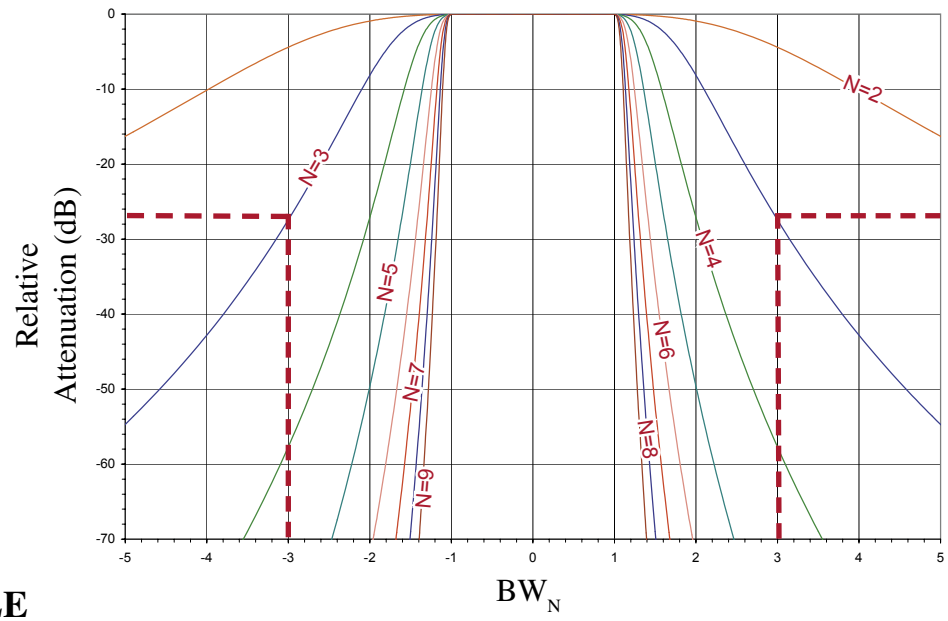

EXAMPLE

Determine minimum attenuation levels at 2482 MHz and 2518 MHz for the following filter:

Center Frequency = 2500 MHz
Minimum 3 dB Bandwidth = 6 MHz
Number of sections = 3

Solution:

3 dB bandwidths from F_c,(BW_N) = $(2482 - 2500)/16 = -3\ BW_N$
$(2518 - 2500)/6 = +3\ BW_N$

From the curve above: $-3\ BW_N = 27$ dB
$+3\ BW_N = 27$ dB

*Note: For illustration purposes only. Consult factory for specific information.

6743 KINNE STREET
E. SYRACUSE, NY 13057
800-448-1666 • 315-438-4700
E-Mail: mfcsales@microwavefilter.com
Web: www.microwavefilter.com

Microwave Filter Company

MC Series
Combline Bandpass Filters

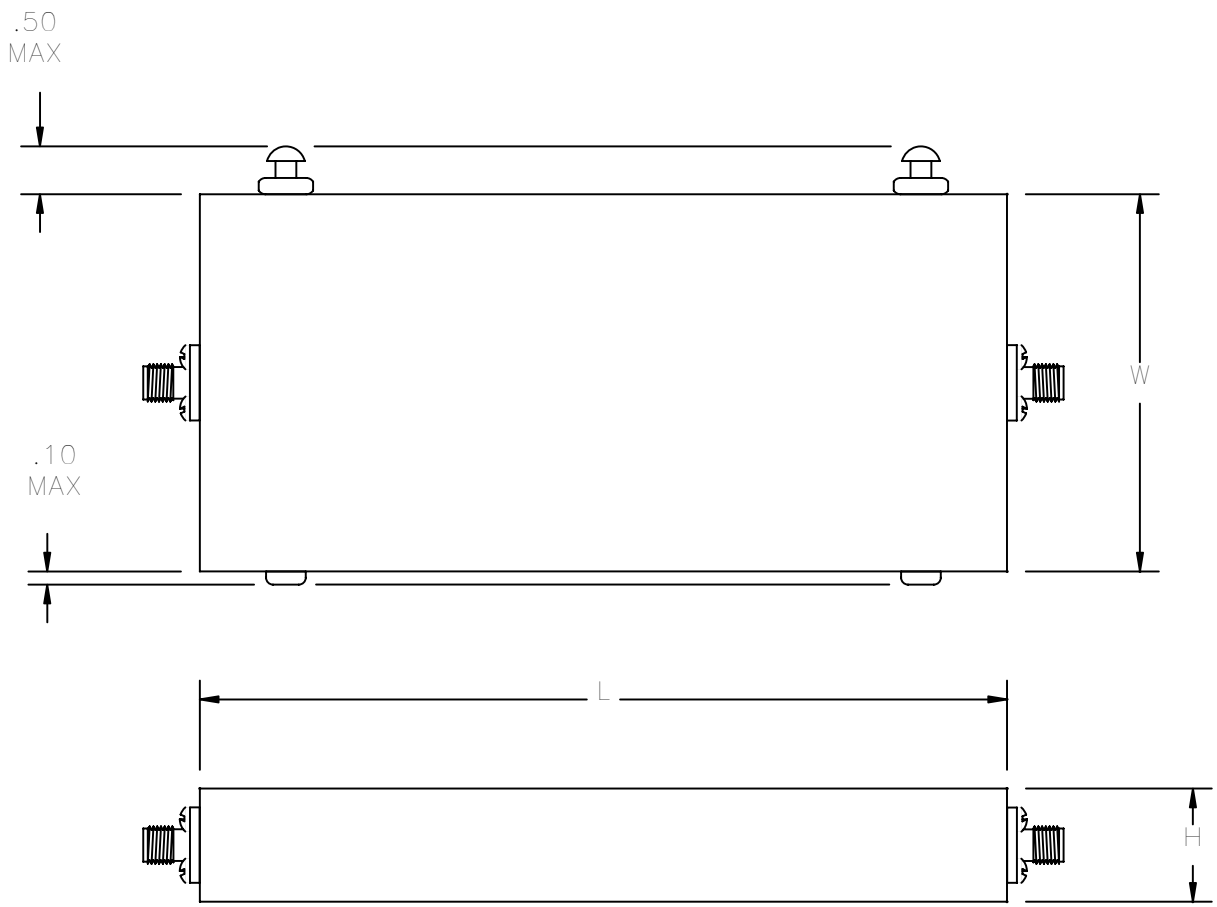

Model	W * (IN.)	H (IN.)	L (IN.)
MC10	2 - 5	.75	SEE CALCULATIONS
MC20	0.75 - 2	.625	SEE CALCULATIONS
MC30	.375 - .75	.437	SEE CALCULATIONS
MC40	.187 - .375	.375	SEE CALCULATIONS
MC50	.125 - .187	.125	SEE CALCULATIONS

ESTIMATED L - [N(PS)] + [N(D)] + H
WHERE:
N = # OF SECTIONS
PS = H(.75)
D = H(.126)
* LOWER FREQUENCY = LARGER W

Microwave Filter Company

MM Series
Interdigital Bandpass Filters

Microwave Filter Company's MM series of Interdigital filters offer superior performance in a small package for medium bandwidth applications

- Features....
  - Available frequency range: 300 MHz to 26.5 GHz
  - Low-profile package
  - Wide range of 3 dB bandwidths (10-70%)
  - 2-18 section designs are standard
  - Call the factory for custom designs

Specifications

Model No.	Frequency (GHz)	3 dB BW (percent)	VSWR typical	No. of Sections
MM10	0.3 to 1.5	10-70	1.5:1	2-18
MM20	1.5 to 6	10-70	1.5:1	2-18
MM30	4 to 10	10-70	1.5:1	2-18
MM40	8 to 18	10-70	1.5:1	2-18
MM50	18 to 26.5	10-70	1.5:1	2-18

MODEL DESIGNATION

Code	Description
1	Number of Sections
2	Model Number
3	Center Frequency (GHz)
4	3 dB Bandwidth (MHz)
5	Connector Code (Input/Output)

SAMPLE

5	MM30-	5000/	1800-	NF/NF
1	2	3	4	5

CONNECTOR CODE CHART

Connector Style	Connector Code
"N" Female	NF
"N" Male	NM
BNC Female	BF
BNC Male	BM
TNC Female	TF
TNC Male	TM
SMA Female	SF
SMA Male	SM
PC Mounting	PC
Special	XX

6743 KINNE STREET
E. SYRACUSE, NY 13057
800-448-1666 • 315-438-4700
E-Mail: mfcsales@microwavefilter.com
Web: www.microwavefilter.com

The curves below show the attenuation as a function of the normalized 3dB bandwidth. The following formula is used to predict the attenuation for a given number of sections:

$$\text{Number of normalized 3 dB bandwidths from center frequency, } BW_N = \frac{\text{Rejection Frequency (MHz)} - \text{Center Frequency (MHz)}}{\text{3 dB Bandwidth (MHz)}}$$

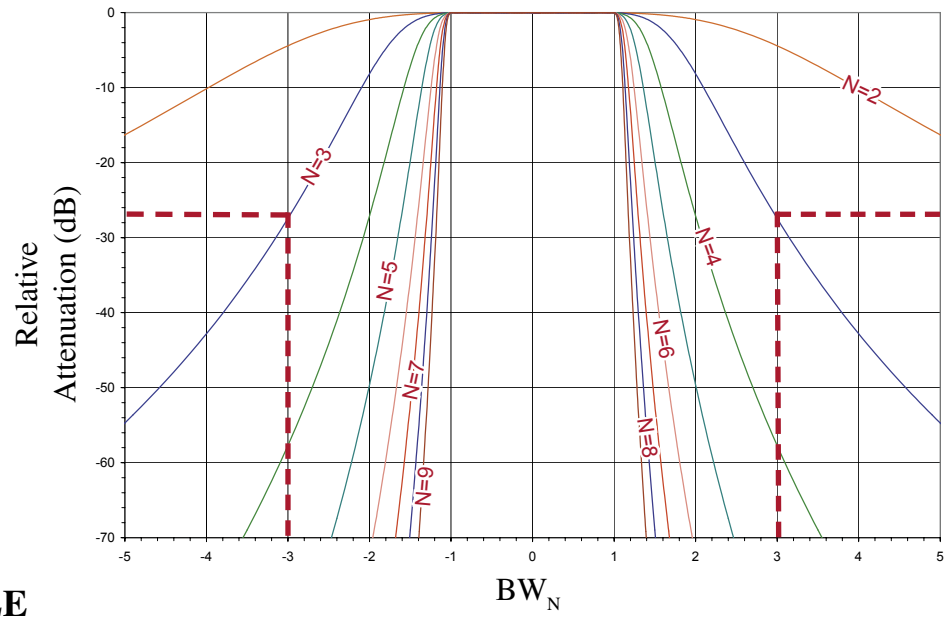

EXAMPLE

Determine minimum attenuation levels at 2482 MHz and 2518 MHz for the following filter:

Center Frequency = 2500 MHz
Minimum 3 dB Bandwidth = 6 MHz
Number of sections = 3

Solution:

3 dB bandwidths from F_c,(BW_N) = $(2482 - 2500)/16 = -3\ BW_N$
$(2518 - 2500)/6 = +3\ BW_N$

From the curve above: $-3\ BW_N = 27$ dB
$+3\ BW_N = 27$ dB

*Note: For illustration purposes only. Consult factory for specific information.

Microwave Filter Company

MM Series
Interdigital Bandpass Filters

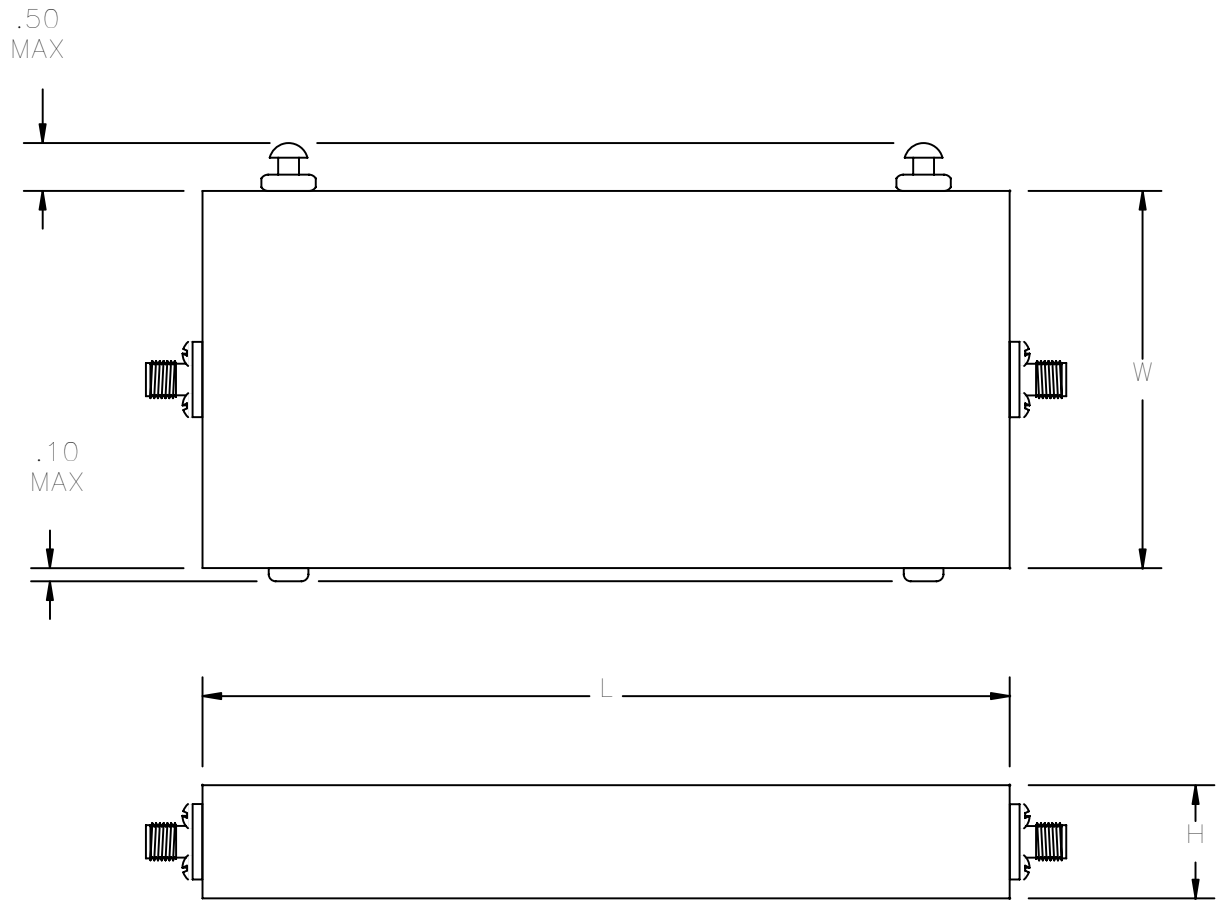

Model	Width* (IN.)	Height (IN.)	Length (IN.)
MM10	3.0- 10.0	0.75	SEE CALCULATIONS
MM20	0.75 - 3.0	0.625	SEE CALCULATIONS
MM30	0.375 - 0.75	0.437	SEE CALCULATIONS
MM40	0.187 - 0.375	0.375	SEE CALCULATIONS
MM50	0.125 - 0.187	0.125	SEE CALCULATIONS

ESTIMATED L - [N(PS)] + [N(D)] + H
WHERE:
N = # OF SECTIONS
PS = H(.75)
D = H(.126)
* LOWER FREQUENCY = LARGER W

6743 KINNE STREET
E. SYRACUSE, NY 13057
800-448-1666 • 315-438-4700
E-Mail: mfcsales@microwavefilter.com
Web: www.microwavefilter.com

Microwave Filter Company

WAVEGUIDE PRODUCTS

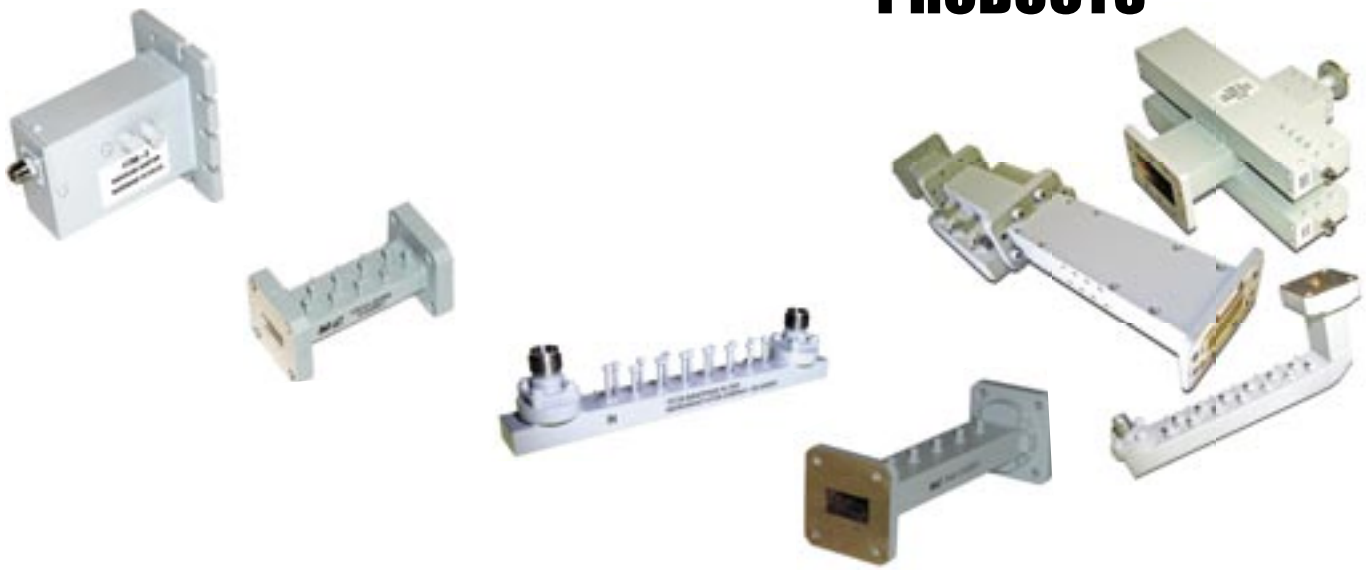

Microwave Filter Company, Inc. offers a complete line of waveguide filter designs including bandpass, band reject and diplexed models as well as adapters and other accessories. Available waveguide sizes range from WR22 to WR650 covering the frequency spectrum from 1 GHz to 40 GHz with bandwidths up to 15%. MFC bandpass designs exhibit excellent out-of-band rejection making them ideally suited to receiver front-end or transmitter applications. Designs are available with 2 to 18 resonator sections to satisfy the most severe requirements. Construction materials include copper, aluminum and invar and may be folded to meet with specific customer configurations.

Design Curves

The normalized bandwidth attenuation curves included here-in are representative only and are not meant to be definitive with regard to the filter parameters. Many other variables allow the designer to tailor the transfer function to meet the custom needs of a requirement.

Microwave Filter Company

WMN Series
Narrow Bandwidth
Iris Coupled Waveguide Bandpass Filters

Microwave Filter Company's WMN series of waveguide bandpass filters use iris type apertures for narrow bandwidth applications.

- Features....
  - Available waveguide sizes - WR650 to WR22
  - Copper construction standard (Aluminum available)
  - Wide range of 3 dB bandwidths (0.1-2%)
  - 2-18 section designs are standard
  - Call the factory for custom designs

MODEL DESIGNATION

Code	Description
1	Number of Sections
2	Series
3	WR Waveguide No.
4	Center Frequency (GHz)
5	3 dB Bandwidth (GHz)
6	Connector Code (Input/Output) (see chart)

SAMPLE

5	WMN	75-	12.0/	0.12-	CPR75/CPRG75
1	2	3	4	5	6

CONNECTOR CODE CHART

Connector Style	Connector Code
"N" Female	NF
"N" Male	NM
SMA Female	SF
SMA Male	SM
2.4 mm Female	24F
2.4 mm Male	24M
2.92 mm Female	KF
2.92 mm Male	KM
CPR Flange	CPR#
CPRG Flange	CPRG#
CMR Flange	CMR#
Mil-STD Flange	M3922/#

Contact Factory for:
-Electrical Performance
-Mechanical configuration

6743 KINNE STREET
E. SYRACUSE, NY 13057
800-448-1666 • 315-438-4700
E-Mail: mfcsales@microwavefilter.com
Web: www.microwavefilter.com

Microwave Filter Company

WMM Series

Medium Bandwidth

Post-Iris Coupled Waveguide Bandpass Filters

Microwave Filter Company's WMM series of waveguide bandpass filters utilize round post apertures for medium bandwidth applications.

- Features....
  - Available waveguide sizes - WR650 to WR22
  - Copper construction standard, (Aluminum available)
  - Wide range of 3 dB bandwidths (2-6%)
  - 2-18 section designs are standard
  - Call the factory for custom designs

MODEL DESIGNATION

Code	Description
1	Number of Sections
2	Series
3	WR Waveguide No.
4	Center Frequency (GHz)
5	3 dB Bandwidth (GHz)
6	Connector Code (Input/Output) (see chart)

SAMPLE

5	WMM	75-	12.0/	0.6-	CPR75/CPRG75
1	2	3	4	5	6

Contact Factory for:
-Electrical Performance
-Mechanical configuration

CONNECTOR CODE CHART

Connector Style	Connector Code
"N" Female	NF
"N" Male	NM
SMA Female	SF
SMA Male	SM
2.4 mm Female	24F
2.4 mm Male	24M
2.92 mm Female	KF
2.92 mm Male	KM
CPR Flange	CPR#
CPRG Flange	CPRG#
CMR Flange	CMR#
Mil-STD Flange	M3922/#

Microwave Filter Company

WMW Series

Wide Bandwidth

Septum Coupled Waveguide Bandpass Filters

Microwave Filter Company's WMW series of waveguide bandpass filters use septum blade apertures for wide bandwidth applications.

- Features....
  - Available waveguide sizes - WR650 to WR22
  - Copper construction standard, (Aluminum available)
  - Wide range of 3 dB bandwidths (5-15%)
  - 2-18 section designs are standard
  - Call the factory for custom designs

MODEL DESIGNATION

Code	Description
1	Number of Sections
2	Series
3	WR Waveguide No.
4	Center Frequency (GHz)
5	3 dB Bandwidth (GHz)
6	Connector Code (Input/Output) (see chart)

SAMPLE

5	WMM	75-	12.0/	1.2-	CPR75/CPRG75
1	2	3	4	5	6

CONNECTOR CODE CHART

Connector Style	Connector Code
"N" Female	NF
"N" Male	NM
SMA Female	SF
SMA Male	SM
2.4 mm Female	24F
2.4 mm Male	24M
2.92 mm Female	KF
2.92 mm Male	KM
CPR Flange	CPR#
CPRG Flange	CPRG#
CMR Flange	CMR#
Mil-STD Flange	M3922/#

Contact Factory for:

-Electrical Performance

-Mechanical configuration

6743 KINNE STREET
E. SYRACUSE, NY 13057
800-448-1666 • 315-438-4700
E-Mail: mfcsales@microwavefilter.com
Web: www.microwavefilter.com

Microwave Filter Company

WCA Series
Waveguide-to-Coax Adaptors

Microwave Filter Company offers a large selection of Waveguide-to-Coaxial In-Series Adaptors. The WCA series of adaptors are used to transition from coaxial (TEM) mode to the dominant waveguide ($TE_{1,0}$) mode.

- Features....
  - Available waveguide sizes - WR650 to WR22
  - Copper construction standard, (Aluminum available)
  - 1.2:1 VSWR Bandwidth's up to 30%
  - Many mechanical configurations available
  - Call the factory for custom designs

MODEL DESIGNATION

Code	Description
1	Series
2	WR Waveguide No.
3	Center Frequency (GHz)
4	1.2:1 VSWR Bandwidth (GHz)
5	Connector Code (waveguide/Coax) (see chart)

SAMPLE

WCA	75-	12.0/	1.2-	CPR75/NF
1	2	3	4	5

Contact Factory for:
-Electrical Performance
-Mechanical configuration

CONNECTOR CODE CHART

Connector Style	Connector Code
"N" Female	NF
"N" Male	NM
SMA Female	SF
SMA Male	SM
2.4 mm Female	24F
2.4 mm Male	24M
2.92 mm Female	KF
2.92 mm Male	KM
7/8 EIA	78
1 5/8 EIA	58
7/16 DIN	76D
CPR Flange	CPR#
CPRG Flange	CPRG#
CMR Flange	CMR#
Mil-STD Flange	M3922/#

Microwave Filter Company

Waveguide Assemblies

Microwave Filter Company, Inc. provides a wide array of custom waveguide assemblies that are designed, manufactured, and tested to customer specifications.

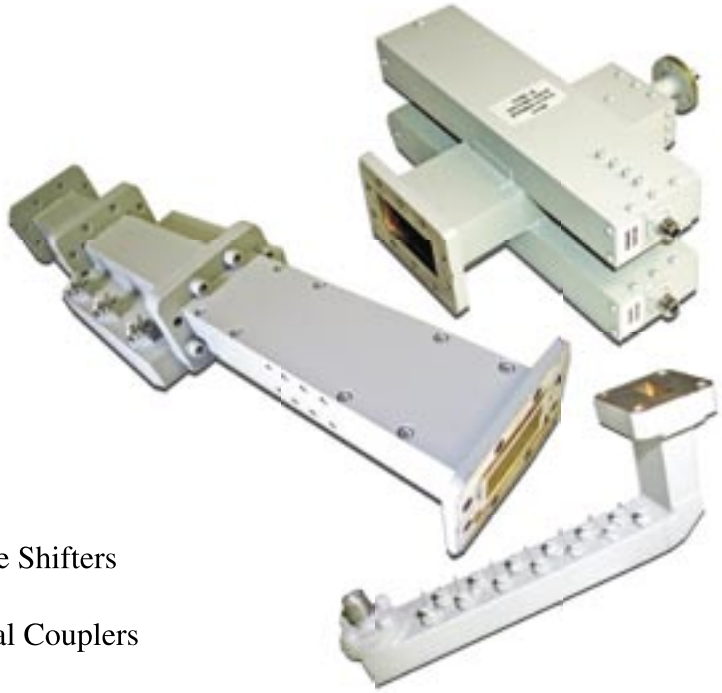

Available Products

- Integrated Filter Assemblies
- 90˚ and 180˚ Hybrid Couplers / Phase Shifters
- Crossguide and Broadwall Directional Couplers
- E and H plane Waveguide Bends
- Low Power Waveguide Terminations
- Custom Bend Assemblies / Comparators

ORDERING INFORMATION

Due to the custom nature of waveguide assemblies, a detailed quotation will be required. Please call the factory with technical requirements.

Contact Factory for:
-Electrical Performance
-Mechanical configuration

6743 KINNE STREET
E. SYRACUSE, NY 13057
800-448-1666 • 315-438-4700
E-Mail: mfcsales@microwavefilter.com
Web: www.microwavefilter.com

Microwave Filter Company

WIRELESS & MISCELLANEOUS PRODUCTS

Microwave Filter Company, Inc. designs and manufactures a wide variety of filters, duplexers and special items for the wireless marketplace. The products included in this section are a representative sample of our more popular product offerings for the following bands:

Frequency Range	Receive	Transmit
AMPS-Full Band	824 – 849 MHz	869 – 894 MHz
EGSM Band	880 – 915 MHz	925 – 960 MHz
800 MHz SMR Band	806 – 821 MHz	851 – 866 MHz
900 MHz SMR Band	869 – 901 MHz	935 – 940 MHz
DCS Full-Band	1710-1785 MHz	1805-1880 MHz
PCS Full-Band	1850-1910 MHz	1930-1990 MHz
UTMS/IMT Full-Band	1920-1980 MHz	2110-2170 MHz

Design Curves

The normalized bandwidth attenuation curves included here-in are representative only and are not meant to be definitive with regard to the filter parameters. Many other variables allow the designer to tailor the transfer function to meet the custom needs of a requirement.

Microwave Filter Company

CWC Series
Combiners

Microwave Filter Company's CWC series of Combiners allow simultaneous use of antennas and transmission line for co-located service providers.

- Features....
  - Low Insertion Loss
  - Wide Range of Channel Bandwidths Available
  - High Carrier/ Carrier Isolation
  - Call the factory for custom designs

SPECIFICATIONS

Model No.	Duplex Band	VSWR typical	Average Power per Carrier (Watts)	Impedance (Ohms)	Mutual Isolation (dB)
CWC10	AMPS/TACS	1.2:1	50	50	20-50 Available
CWC20	GSM/EGSM	1.2:1	50	50	20-50 Available
CWC30	800 MHz SMR	1.2:1	35	50	20-50 Available
CWC40	900 MHz SMR	1.2:1	35	50	20-50 Available
CWC50	DCS	1.2:1	25	50	20-50 Available
CWC60	PCS	1.2:1	25	50	20-50 Available
CWC70	UMTS/IMT	1.2:1	25	50	20-50 Available

Model Designation

Code	Description
1	Mutual Isolation (dB)
2	Series
3	Center Frequency Carrier 1/ Center Frequency Carrier 2 (MHz)
4	3 dB Bandwidth (MHz)
5	Average Power per Carrier (Watts)
6	Connector Code (see chart)

SAMPLE

50	CWC10-	820/840-	1.25/1.25-	20-	NF/NM
1	2	3	4	5	6

CONNECTOR CODE CHART

Connector Style	Connector Code
"N" Female	NF
"N" Male	NM
SMA Female	SF
SMA Male	SM
7/8 EIA	78
1 5/8 EIA	58
7/16 DIN	76D

Contact Factory for:

-Electrical Performance

-Mechanical configuration

6743 KINNE STREET
E. SYRACUSE, NY 13057
800-448-1666 • 315-438-4700
E-Mail: mfcsales@microwavefilter.com
Web: www.microwavefilter.com

Microwave Filter Company

CWD Series
Duplexers

Microwave Filter Company's CWD series of Duplexers provide passive signal processing for all standard wireless bands.

- Features....
  - Low Insertion Loss
  - Full Band or Channelized
  - Exceptional Transmit/Receive Isolation
  - Call the factory for custom designs

SPECIFICATIONS

Model No.	Duplex Band	VSWR typical	Average Tx Power (Watts)	Impedance (Ohms)	Mutual Isolation (dB)
CWD10	AMPS/TACS	1.2:1	250	50	20-60 Available
CWD20	GSM/EGSM	1.2:1	250	50	20-60 Available
CWD30	800 MHz SMR	1.2:1	250	50	20-60 Available
CWD40	900 MHz SMR	1.2:1	250	50	20-60 Available
CWD50	DCS	1.2:1	100	50	20-60 Available
CWD60	PCS	1.2:1	100	50	20-60 Available
CWD70	UMTS/IMT	1.2:1	100	50	20-60 Available

MODEL DESIGNATION

Code	Description
1	Mutual Isolation (dB)
2	Series
3	Center Frequency Tx/ Center Frequency Rx (MHz)
4	3 dB Bandwidth Tx/ 3dB Bandwidth Rx (MHz)
5	Average Power (Watts)
6	Connector Code (Common/Tx/Rx) (see chart)

SAMPLE

60	CWD20-	902.5/947.5-	25/25-	250-	NF/NF/NF
1	2	3	4	5	6

CONNECTOR CODE CHART

Connector Style	Connector Code
"N" Female	NF
"N" Male	NM
SMA Female	SF
SMA Male	SM
7/8 EIA	78
1 5/8 EIA	58
7/16 DIN	76D

Contact Factory for:

-Electrical Performance

-Mechanical configuration

Microwave Filter Company

CWP Series
Bandpass Filters

Microwave Filter Company's CWP series of Bandpass Filters offer high performance in a low profile package.

- Features....
  - Low Insertion Loss & Group Delay
  - Full Band or Channelized
  - Monotonic or Elliptical Function Stopbands available
  - Call the factory for custom designs

SPECIFICATIONS

Model No.	Duplex Band	VSWR typical	Average Power (Watts)	Impedance (Ohms)	Number of Sections
CWP10	AMPS/TACS	1.2:1	250	50	3-11
CWP20	GSM/EGSM	1.2:1	250	50	3-11
CWP30	800 MHz SMR	1.2:1	250	50	3-11
CWP40	900 MHz SMR	1.2:1	250	50	3-11
CWP50	DCS	1.2:1	100	50	3-11
CWP60	PCS	1.2:1	100	50	3-11
CWP70	UMTS/IMT	1.2:1	100	50	3-11

MODEL DESIGNATION

Code	Description
1	Number of Sections
2	Series
3	Center Frequency (MHz)
4	3 dB Bandwidth (MHz)
5	Average Power (Watts)
6	Connector Code (see chart)

SAMPLE

5	CWP10-	840-	25-	250-	NF/NM
1	2	3	4	5	6

CONNECTOR CODE CHART

Connector Style	Connector Code
"N" Female	NF
"N" Male	NM
SMA Female	SF
SMA Male	SM
7/8 EIA	78
1 5/8 EIA	58
7/16 DIN	76D

Contact Factory for:
-Electrical Performance
-Mechanical configuration

6743 KINNE STREET
E. SYRACUSE, NY 13057
800-448-1666 • 315-438-4700
E-Mail: mfcsales@microwavefilter.com
Web: www.microwavefilter.com

Microwave Filter Company

CWS Series
Notch Filters

Microwave Filter Company's CWS series of Notch Filters provide a temperature stable, high Q bandstop response.

- Features....
  - Deep, Symetrical Notch Response
  - Small Mechanical Profile
  - Low Passband Insertion Loss
  - Call the factory for custom designs

SPECIFICATIONS

Model No.	Band	Passband VSWR typical	Average Passband Power (Watts)	Impedance (Ohms)	Notch depth (dB)
CWS10	AMPS/TACS	1.25:1	100	50	10-60
CWS20	GSM/EGSM	1.25:1	100	50	10-60
CWS30	800 MHz SMR	1.25:1	100	50	10-60
CWS40	900 MHz SMR	1.25:1	100	50	10-60
CWS50	DCS	1.25:1	50	50	10-60
CWS60	PCS	1.25:1	50	50	10-60
CWS70	UMTS/IMT	1.25:1	50	50	10-60

MODEL DESIGNATION

Code	Description
1	Notch Depth (dB)
2	Series
3	Notch Frequency (MHz)
4	3 dB Bandwidth (MHz)
5	Average Passband Power (Watts)
6	Connector Code (see chart)

CONNECTOR CODE CHART

Connector Style	Connector Code
"N" Female	NF
"N" Male	NM
SMA Female	SF
SMA Male	SM
7/8 EIA	78
1 5/8 EIA	58
7/16 DIN	76D

SAMPLE

30	CW10-	845-	10-	100-	NF/NM
1	2	3	4	5	6

Contact Factory for:

-Electrical Performance

-Mechanical configuration

Microwave Filter Company

TL Series
Tubular Lowpass Filters

Microwave Filter Company's TL series of Tubular Lowpass filters cover the frequency range from 50 MHz to 20 GHz. Four different cases sizes are available to accommodate varying power levels while providing low passband insertion loss and high levels of stopband attenuation.

- Features....
  - Available frequency range: 50 MHz to 20 GHz
  - 2-10 section designs are standard
  - Call the factory for custom designs

SPECIFICATIONS

Model No.	Frequency (MHz)	VSWR typical	Average Power (Watts)	Impedance (Ohms)	No. of Sections
TL10	300 to 20,000	1.5:1	2	50	2-10
TL20	60 to 3000	1.5:1	15	50	2-10
TL30	50 to 2000	-	40	50	-
TL40	50 to 1000	-	200	50	2-10

MODEL DESIGNATION

Code	Description
1	Number of Sections
2	Model Number
3	Cutoff Frequency (MHz)
4	Connector Code (Input/Output)

SAMPLE

5	TL20-	1000/	NF/NF
1	2	3	4

CONNECTOR CODE CHART

Connector Style	Connector Code
"N" Female	NF
"N" Male	NM
BNC Female	BF
BNC Male	BM
TNC Female	TF
TNC Male	TM
SMA Female	SF
SMA Male	SM

Contact Factory for:
-Electrical Performance
-Mechanical configuration

6743 KINNE STREET
E. SYRACUSE, NY 13057
800-448-1666 • 315-438-4700
E-Mail: mfcsales@microwavefilter.com
Web: www.microwavefilter.com

Microwave Filter Company

HIGH Q
BANDPASS FILTERS
MODELS 9393, 9494, 9507, 9510, 9512

Microwave Filter Company's line of High Q Bandpass Filter offers tunable quarter wave cavities in a variety of diameters for increased Q, selectivity and low loss. Tunability, $F_o \pm 5\%$, is achieved using adjustable loops and tunable resonators. Single, double and triple cavity models are available covering a broad frequency band of 30 - 950 MHz.

Useful as a receive preselector or to clean up spurious transmit signals, the High Q Bandpass Filter is also available in custom configurations and multiplexers to meet your
particular requirements.

Temperature stability using an invar tuning rod, and our rugged low loss construction makes a dependable filter.
Please feel free to contact the company toll free for additional information.

9xxx -(F_o)(# sections)(BW)
F_o = Center Frequency

Bandwidth: .....Up to 3% (bandwidth/center frequency)
VSWR: ..... 1.5:1 max.
Power handling: .....350 watts w/0.5 dB insertion loss
250 watts w/1.0 dB insertion loss
100 watts w/2.0 dB insertion loss
Temperature stability: ..... 0.0005 MHz/°C
Approx. size:.....Diameter x 1/4 wavelength
Connectors: .....Type N female (50 Ohm)

Freq. Range (MHz)	9393 3"x3"	9494 4"x4"	9507 7" Dia.	9510 10" Dia	9512 12" Dia.
30 - 200					
200 - 300					
300 - 406					
406 - 512					
512 - 700					
700 - 950					

REJECTION

	10 dB BW	30 dB BW
Single Cavity	4.0 x BW_3	30 x BW_3
Double Cavity	4.0 x BW_r	13 x BW_r
Triple Cavity	2.1 x BW_r	4.5 x BW_r

BW_3 = Passband width at 3 dB points

BW_r = Ripple bandwidth at 14 dB return loss

INSERTION LOSS

Single Cavity	$\frac{(.06)\sqrt{F}}{BW_3}$	$\frac{(0.0463)(\sqrt{F})}{BW_3}$	$\frac{(0.0254)(\sqrt{F})}{BW_3}$	$\frac{(0.0228)(\sqrt{F})}{BW_3}$	$\frac{(0.0188)(\sqrt{F})}{BW_3}$
Double Cavity	$\frac{(.0359)\sqrt{F}}{BW_r}$	$\frac{(0.0275)(\sqrt{F})}{BW_r}$	$\frac{(0.0151)(\sqrt{F})}{BW_r}$	$\frac{(0.0135)(\sqrt{F})}{BW_r}$	$\frac{(0.0122)(\sqrt{F})}{BW_r}$
Triple Cavity	$\frac{(.083)\sqrt{F}}{BW_r}$	$\frac{(0.0642)(\sqrt{F})}{BW_r}$	$\frac{(0.035)(\sqrt{F})}{BW_r}$	$\frac{(0.0315)(\sqrt{F})}{BW_r}$	$\frac{(0.0279)(\sqrt{F})}{BW_r}$

Microwave Filter Company

HIGH Q
NOTCH FILTERS
MODELS 9603, 9604, 9607, 9610, 9612

Microwave Filter Company's line of High Q Notch or Band Reject filter is field tunable using rotating loops and an adjustable resonator for applications in removing interfering carriers that cause intermodulation products.

Standard models are available in single, double and triple cavities covering a broad frequency range of 30-950 MHz. Phased together or cascaded, filter cavities can be combined to increase attenuation at a spot frequency or across a wider band.

Constructed with aluminum housings, high conductivity resonator and an invar tuning rod, the notch filters have excellent power handling capabilities and temperature stability.

Custom designs are also available.

Please feel free to contact the company toll free for additional information.

96xx -(F_o)(# sections)(BW_3)
F_o = Notch frequency

Bandwidth: ..... Up to 3% (bandwidth/center frequency)
VSWR: ..... 1.5:1 max.
Power handling: ..... 350 watts w/0.5 dB insertion loss
..... 250 watts w/1.0 dB insertion loss
..... 100 watts w/2.0 dB insertion loss
Temperature stability: ..... 0 .0005 MHz/°C
Approx. size: ..... Diameter x 1/4 wave length
Connectors: ..... Type N female (50 Ohms)

Freq. Range (MHz)	9603 3"x3"	9604 4"x4"	9607 7" Dia.	9610 10" Dia	9612 12" Dia.
30 - 200					
200 - 300					
300 - 406					
406 - 512					
512 - 700					
700 - 950					

0.5 dB BANDWIDTH

Single Cavity	3.0 x BW_3
Double Cavity	1.80 x BW_3
Triple Cavity	1.65 x BW_3

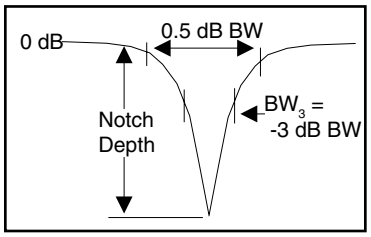

NOTCH DEPTH - dB

Single Cavity	$20\text{Log}\left[\frac{120(BW_3)}{\sqrt{F_o}}\right]$	$20\text{Log}\left[\frac{185(BW_3)}{\sqrt{F_o}}\right]$	$20\text{Log}\left[\frac{300(BW_3)}{\sqrt{F_o}}\right]$	$20\text{Log}\left[\frac{380(BW_3)}{\sqrt{F_o}}\right]$	$20\text{Log}\left[\frac{460(BW_3)}{\sqrt{F_o}}\right]$
Double Cavity	$40\text{Log}\left[\frac{120(BW_3)}{\sqrt{F_o}}\right]$	$40\text{Log}\left[\frac{185(BW_3)}{\sqrt{F_o}}\right]$	$40\text{Log}\left[\frac{300(BW_3)}{\sqrt{F_o}}\right]$	$40\text{Log}\left[\frac{380(BW_3)}{\sqrt{F_o}}\right]$	$40\text{Log}\left[\frac{460(BW_3)}{\sqrt{F_o}}\right]$
Triple Cavity	$60\text{Log}\left[\frac{120(BW_3)}{\sqrt{F_o}}\right]$	$60\text{Log}\left[\frac{185(BW_3)}{\sqrt{F_o}}\right]$	$60\text{Log}\left[\frac{300(BW_3)}{\sqrt{F_o}}\right]$	$60\text{Log}\left[\frac{380(BW_3)}{\sqrt{F_o}}\right]$	$60\text{Log}\left[\frac{460(BW_3)}{\sqrt{F_o}}\right]$

6743 KINNE STREET
E. SYRACUSE, NY 13057
800-448-1666 • 315-438-4700
E-Mail: mfcsales@microwavefilter.com
Web: www.microwavefilter.com

Microwave Filter Company

Additional Filter Technologies

Helical Resonator Filters

For narrow band applications, helical filters offer low insertion loss in package sizes smaller than comparable distributed element filters. Both bandpass and bandstop configurations are available.

Center Frequency Option: 50-1200 Mhz
3 dB Bandwidth: 0.5-5%
No. of Sections: 3-8

Stripline/Microstrip Filters

Where size may be a concern and losses not as important, a stripline or microstrip filter offers a nice compromise. Circuit board tolerances can be tightly controlled minimizing variation in the production environment. Bandpass, bandstop, lowpass, and highpass designs are available.

Frequency range availability is from 1-18 GHz
No. of Sections: 3-9

Dielectric Resonator Filters

Where low loss and a small mechanical profile is needed, dielectric resonator filters provide a good solution. The filters are extremely temperature stable and have good-out-of band selectivity while maintaining low passband loss.

Center Frequency Option: 500 MHz-3000 MHz
3 dB Bandwidth: 1-10%
No. of Sections: 2-6
Operating Temperature Range: -30C to +70C
Storage Temperature: -40C to +80C

Contact Factory for:
-Electrical Performance
-Mechanical configuration

Toll-Free Telephone: 800-448-1666
International Telephone: 315-438-4700
Fax: 315-463-1467 Toll-Free Fax: 888-411-8860
E-mail: mfcsales@microwavefilter.com

Cat No: 0505